

EFFICIENCY AND RELIABILITY AS KEY ADVANTAGES.

meVap® Distillation: Mechanical vapor recompression (MVR) solutions for thermal separation processes

GEA Engineering for a better world.

GEA.com



Contents

Mechanical vapor recompression	3
Processes designed to save energy	4
COP of MVR distillation plants	5
Principle sketch of MVR	6
Energy optimization of existing distillation plants	7
2-effect MVR distillation	9
2-effect MVR distillation on two pressure levels	10
MVR distillation for NMP recovery	11
Distillation – Unlimited applications	12
GEA Service – For your continued success.	13

ENERGY-EFFICIENT BY DESIGN

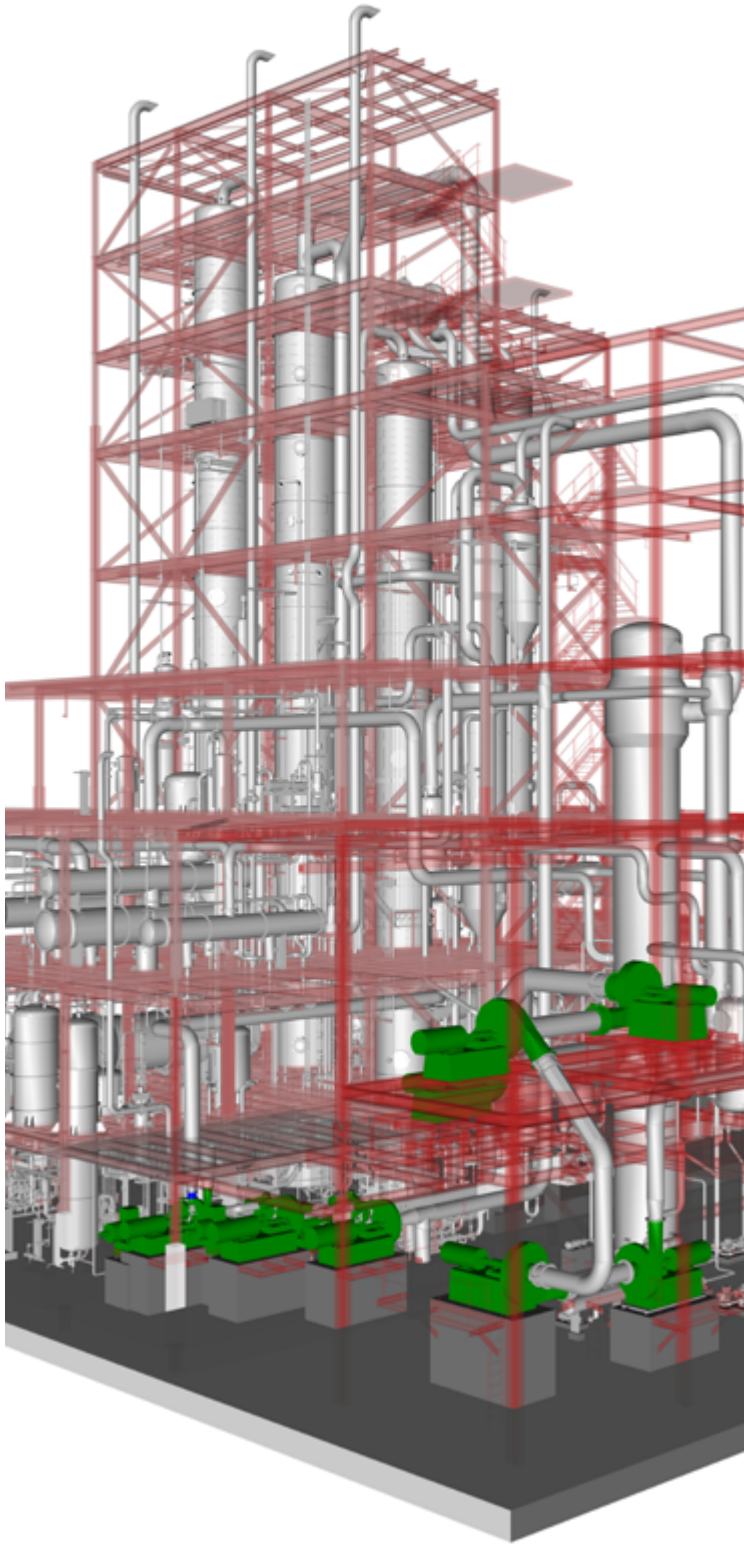

meVap® Distillation, using mechanical vapor recompression (MVR), can reduce energy costs and the carbon footprint, thereby helping to reduce environmental impact.

Thermal separation processes, such as evaporation and distillation, are energy intensive. In the course of their development, the aim of efficiently using this energy and of reducing costs first led to single-effect plants heated by live steam, then to multiple-effect plants, then to thermal vapor recompression and finally to mechanical vapor recompression systems such as meVap® Distillation.

In conventional distillation plants, the energy content of the vapor stream produced is lost to a large extent or is only partially reused. In comparison, meVap® Distillation allows the continuous recycling of this energy stream by recompressing the vapor to a higher pressure and therefore, a higher temperature. The compressed vapor can be used to heat the reboiler of the column. Instead of live steam, electric energy is used indirectly to heat the plant.

Processes designed to save energy

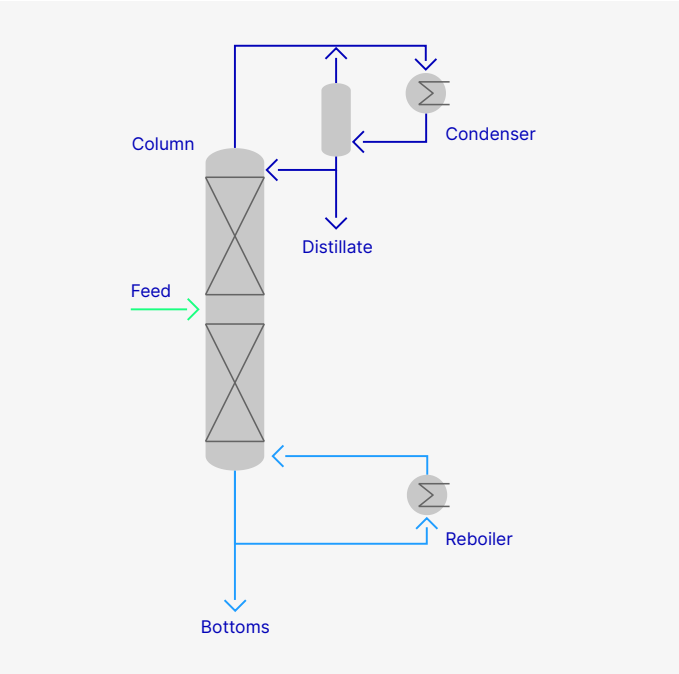

Fig. 1: 1-effect distillation plant

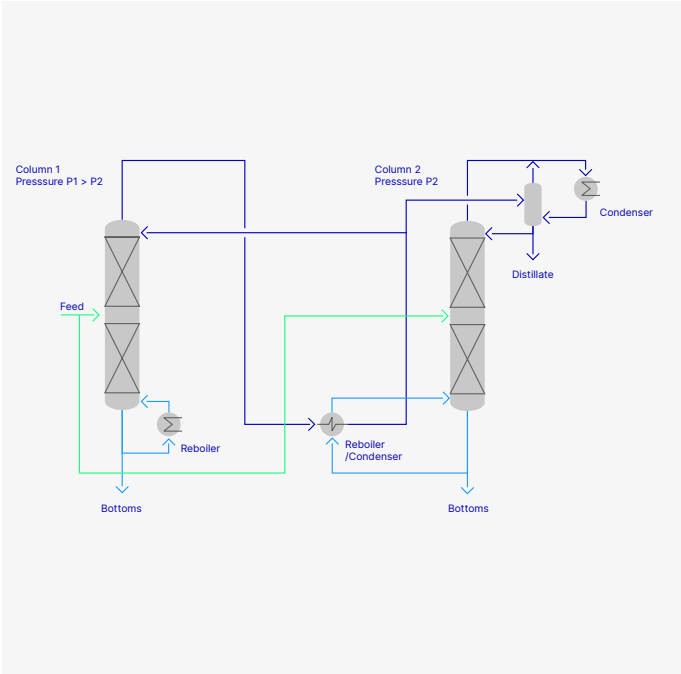

Fig. 2: 2-effect distillation plant

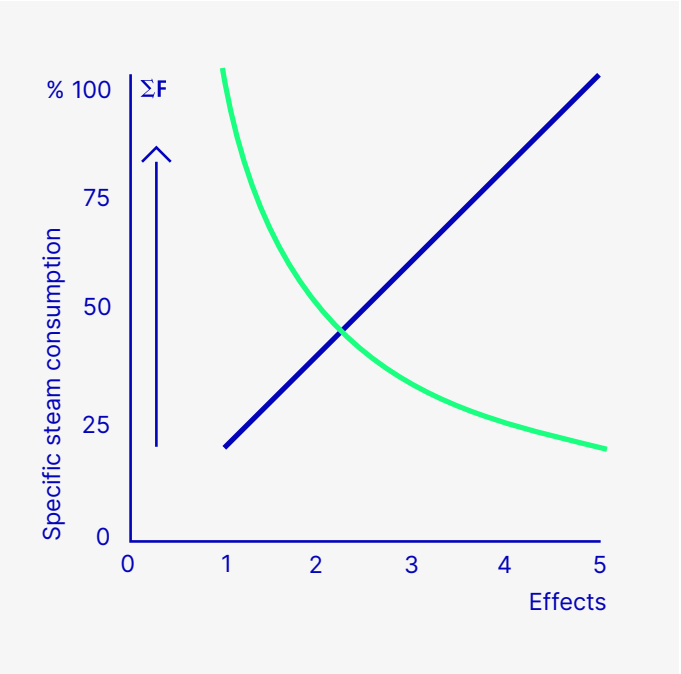

Fig. 3: Specific energy consumption vs No. of effects

Processes designed to save energy

During the distillation process, a vapor flow from the sump to the head of the column is required. In industrial-scale applications, these vapors are generated either via direct steam injection to the column or indirectly via a reboiler that is used as a heat exchanger for generating stripping vapor. Thermal energy is used to heat the liquid and finally to evaporate the low boilers.

Due to the evaporation/stripping of the low boilers, the bottom product is depleted in terms of low boilers, while the low boilers are concentrated in the head vapor. The head vapors contain approximately the same amount of energy as the steam which is heating the reboiler, however, at a lower pressure and temperature level. The vapors are condensed in a condenser and the distillate is partly used as reflux. By using the head vapors of the column as a heating medium for a downstream arranged reboiler, the required thermal energy is almost halved.

This principle can be continued over several distillation columns to further improve the energy saving. The max. permissible heating temperature of the first reboiler and the bottom temperature of the last column result in a total temperature difference which can be distributed to the individual reboilers. The more effects are installed, the lower the energy requirement and the higher the investment.

COP of MVR distillation plants

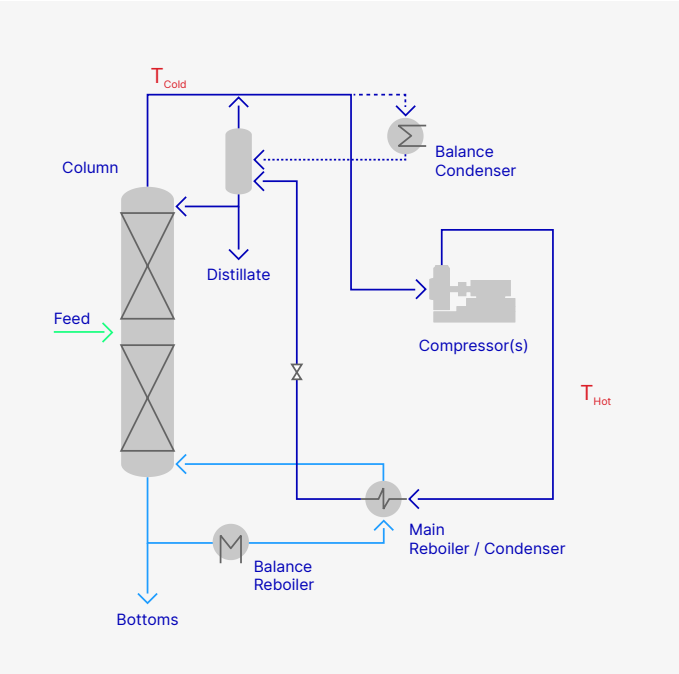

Fig. 1: 1-effect MVR distillation plant

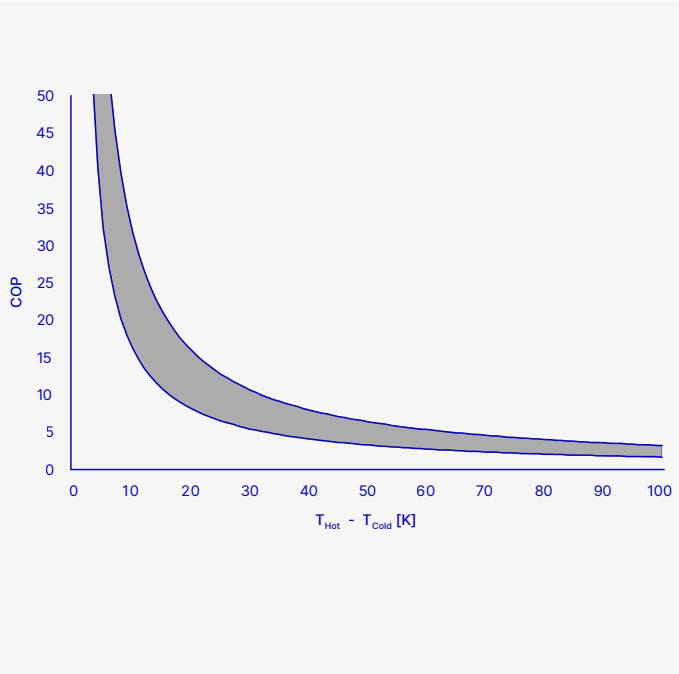

Fig. 2: COP of 1-effect MVR compared to thermal heating

Simplified calculation example:

- A reboiler of a distillation plant is heated by 10 t/h of steam (at 2 bar(a)).
- The plant is revamped to MVR heating and the head vapor temperature T_{Cold} is 80°C.
- The saturation temperature T_{Hot} downstream the MVR is 104°C.
- In this specific case, the MVR power consumption is 600 kW

$$COP = \frac{Q_{thermal}}{Q_{electric}} = \frac{\dot{m} \cdot \Delta h_V}{E_{el}} = \frac{10.000\ kg/h \cdot 2.202\ kJ/kg}{600\ kW \cdot 3600\ s/h} = \frac{6.117\ kW_{th}}{600 kW_{el}} = 10,2$$

The efficiency of a heat pump is indicated by its Coefficient Of Performance (COP). The COP is determined by the ratio between the amount of useful thermal energy and the electrical energy consumption of the compressor.

The COP is a suitable characteristic value to assess the energy-saving potential of a distillation plant with mechanical vapor recompression in comparison to a thermally heated distillation plant (Figure 2).

What does COP stand for?

A high COP value expresses for high efficiency.
Revamps from thermal to MVR heating with COP values of approx.≥ 5 are profitable, depending on the energy costs and the expected amortization period; while MVR technology for new systems could be profitable at lower COP values.

Principle sketch of MVR

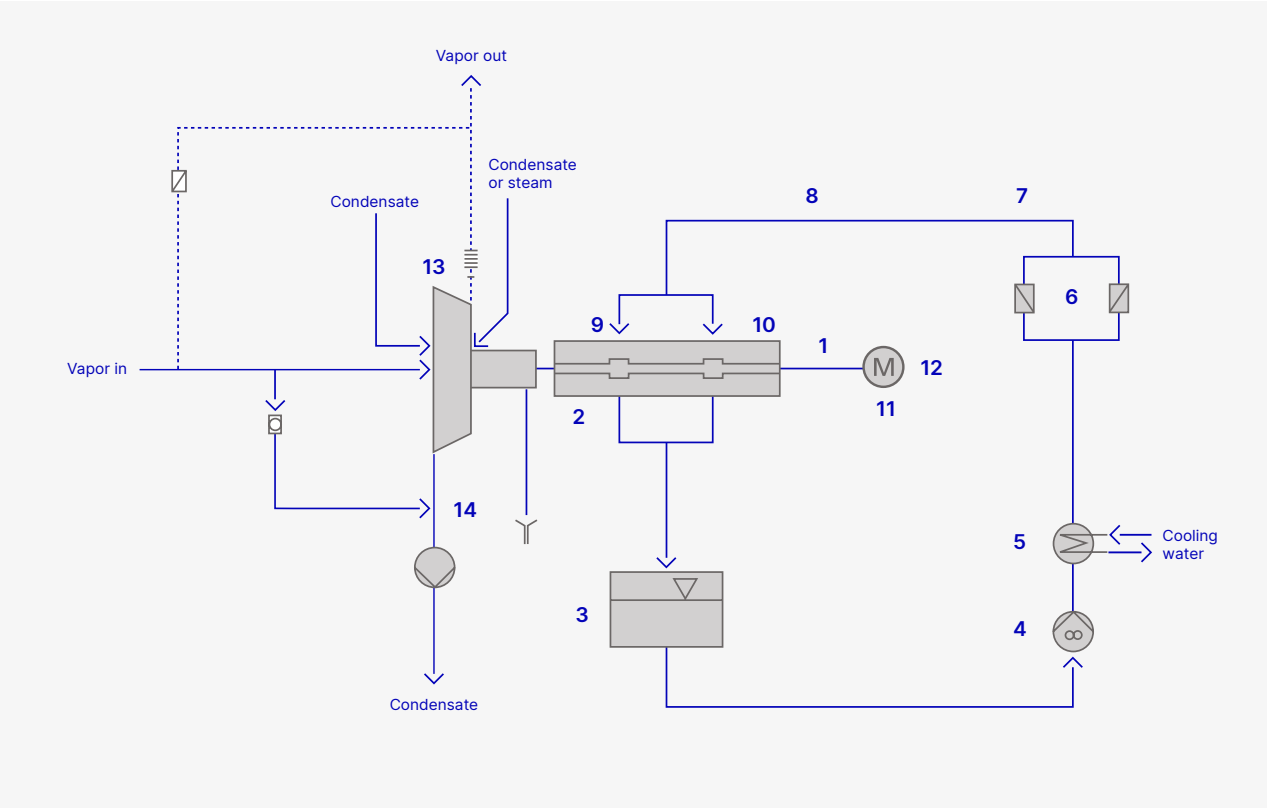

Monitoring and safety devices using the example of a MVR:

- Impeller speed (1)
- Shaft vibrations (2)
- Bearing temperature (9, 10)
- Housing temperature (13)
- Fluid in the housing (14)
- Oil pump (4)
- Oil level and oil temperature in the tank (3)
- Oil pressure and oil flow (6, 7, 8)
- Oil cooler (5)
- Motor bearing temperature (12)
- Motor winding temperature (11)

Reliable Operation

Optimum operation of a distillation plant requires reliable and sufficient heating. In plants with mechanical vapor recompression, the permanently reliable operation of the compressor is vital.

Mechanical vapor recompressors are used in distillation plants either for the compression of water vapor or for the compression of organic vapor (such as isopropanol, ethanol). If flammable organics are to be compressed, an explosion-proof design of the MVRs is required. The declaration of an ATEX Zone 1 within the machine is appropriate if the absence of oxygen is the case under normal process conditions. Outside the MVRs, ATEX Zone 2 can be applied, if adequate ventilation is ensured.

MVR in the ATEX area run at lower speeds due to the reduced yield strength.
However, higher temperature differences can be achieved when compressing high molecular weight vapors, keeping the number of MVRs manageable.

In most cases, three-phase current asynchronous motors with two poles are used. The motor speed is controlled by a frequency converter. A distinction is made between high-voltage and low-voltage motors.

Depending on the conditions on site, the motor capacity in the low-voltage range is up to 630 kW at a voltage of 400 V, and up to 2000 kW at a voltage of 690 V.
Above 1.3 MW, medium voltage frequency converters and medium voltage motors with voltages of 3 kV, 6.6 kV or 10 kV can also be considered.

Energy optimization of existing distillation plants by MVR

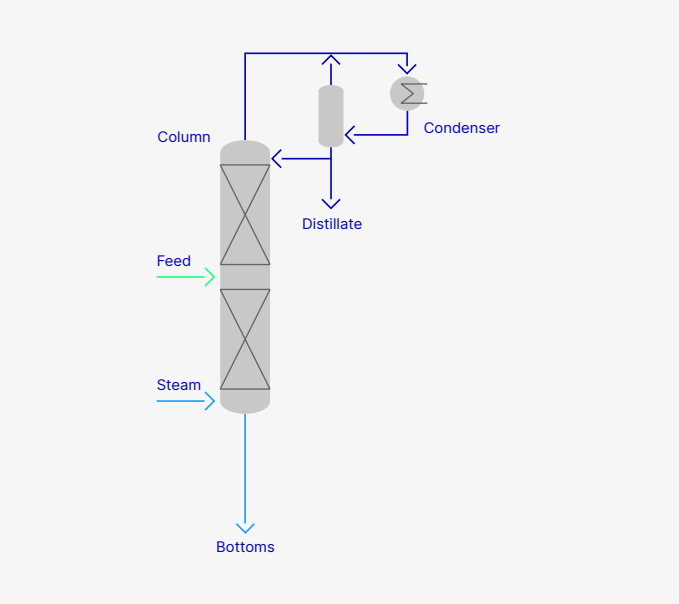

Fig. 1: Distillation plant with live steam injection

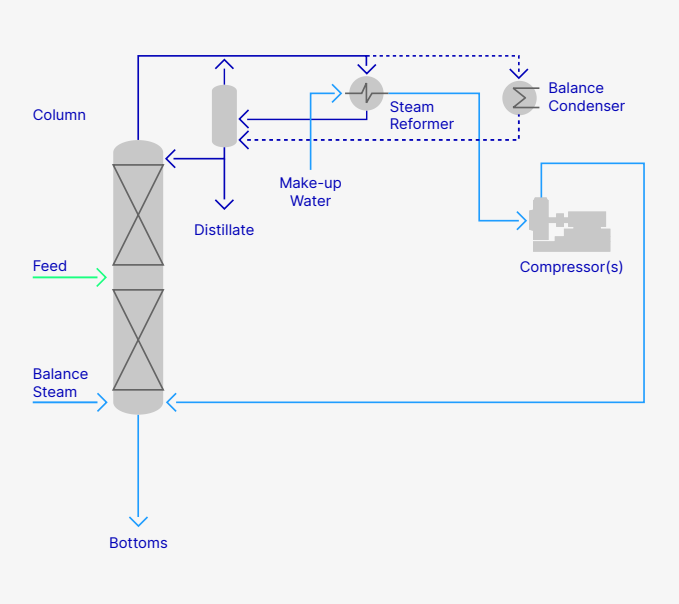

Fig. 2: MVR Distillation plant with injection of compressed vapor

Example 1
A common conventional distillation plant is usually heated by steam in a single column arrangement. There are plants with direct steam injection and others with indirect heat supply via a reboiler, in which the stripping steam is generated from the circulating bottoms.

Example 2
The head vapors of the column with direct steam injection are condensed in a falling-film steam reformer. The condensation heat is transferred to the tube side of the steam reformer where water evaporates at a lower temperature and pressure level. The generated water vapors are compressed by one or more MVRs and injected to the sump of the column for heating.



Energy optimization of existing distillation plants by MVR

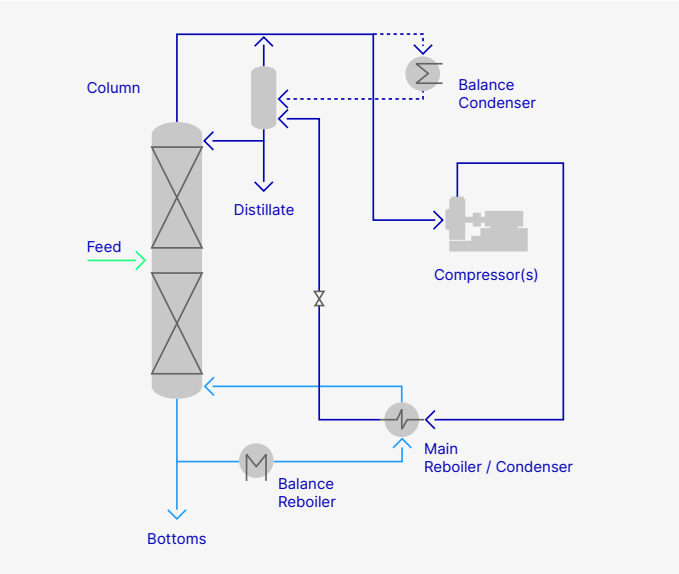

Fig. 3: MVR plant with head vapor compression

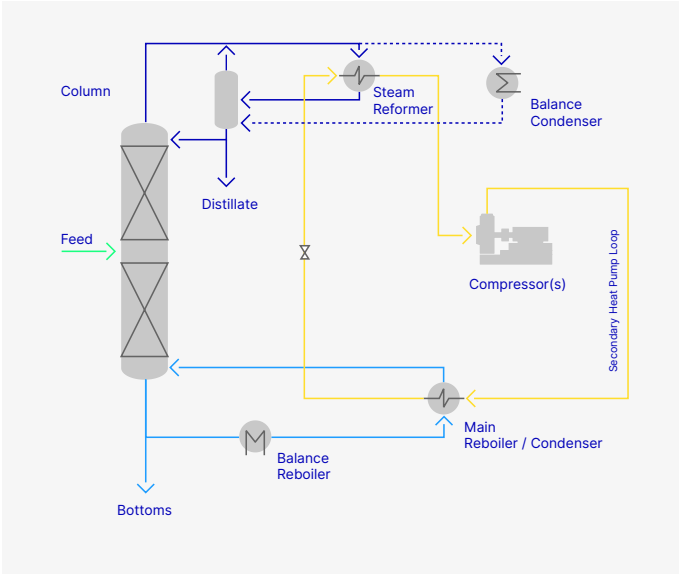

Fig. 4: MVR plant with closed heat cycle

Example 3
The head vapors of the column are sucked in and compressed by one or more MVRs. The compressed vapors heat the sump reboiler and condense in the shell side of the reboiler. Stripping steam is generated from the circulating bottoms in the tube side of the reboiler.

Example 4
The head vapors of the column are condensed in a falling-film steam reformer. The condensation heat is transferred to the tube side of the steam reformer where water evaporates at a lower temperature and pressure level. The generated water vapors are compressed by one or more MVRs and used for heating the reboiler. The water vapors are condensed and returned to the tube side of the steam reformer.

The advantage of the system is the closed heat and water circle and the avoidance of ATEX ratings for the MVRs.



2-effect MVR distillation

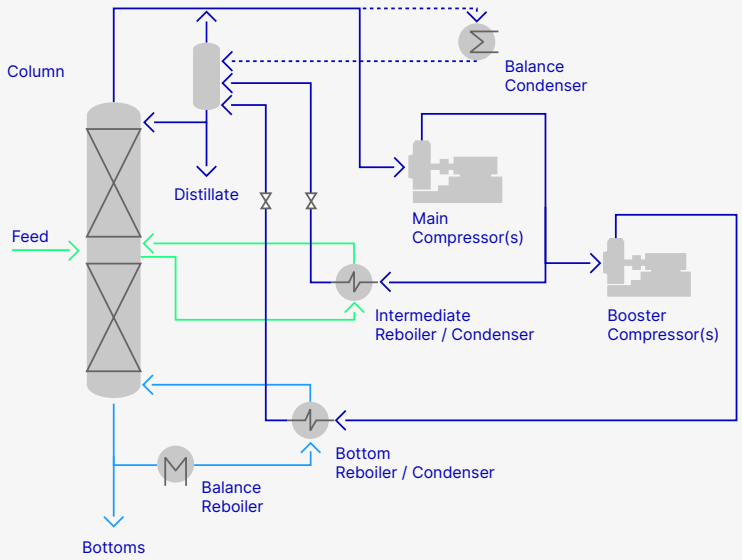

Further energy optimization: MVR distillation plants running on different multiple reboiler pressures

The energy efficiency of a distillation plant heated by mechanical vapor recompression can be further increased by heating the intermediate reboiler of the rectification part and the bottom reboiler of the stripping part at individual temperature and pressure levels. The head vapors of the column are compressed to a higher pressure level by a main compressor.

Parts of the compressed vapors are used to heat the intermediate reboiler which provides the energy for the rectification part of the column. The compressed vapors are condensed in the intermediate reboiler, as the latter is operated at a relatively low temperature level on the tube side due to the comparatively high proportion of low boilers. The remaining parts of the vapor compressed in the main compressor are sucked by one or more booster compressor(s) and compressed to a higher pressure level. The saturation temperature of this vapors is now high enough to heat the bottom reboiler. The tube side of the bottom reboiler runs at a higher temperature level than the intermediate reboiler because the low boilers are already depleted in the sump of the column. The operating pressures in the rectification part and in the stripping part are almost identical and differ just in the pressure losses of the column internals.

This design results in an overall efficiency increase, especially if the intermediate reboiler provides a high heat load at high COP values compared to the low heat load at the bottom reboiler with a lower COP value.
A two-effect MVR design results in a COP increase by a factor of 1.5 to 2.5, depending on the feed concentration.

The design described above has been patented by GEA. (Patent number WO 2008/135192 A1)

2-effect MVR distillation on two pressure levels

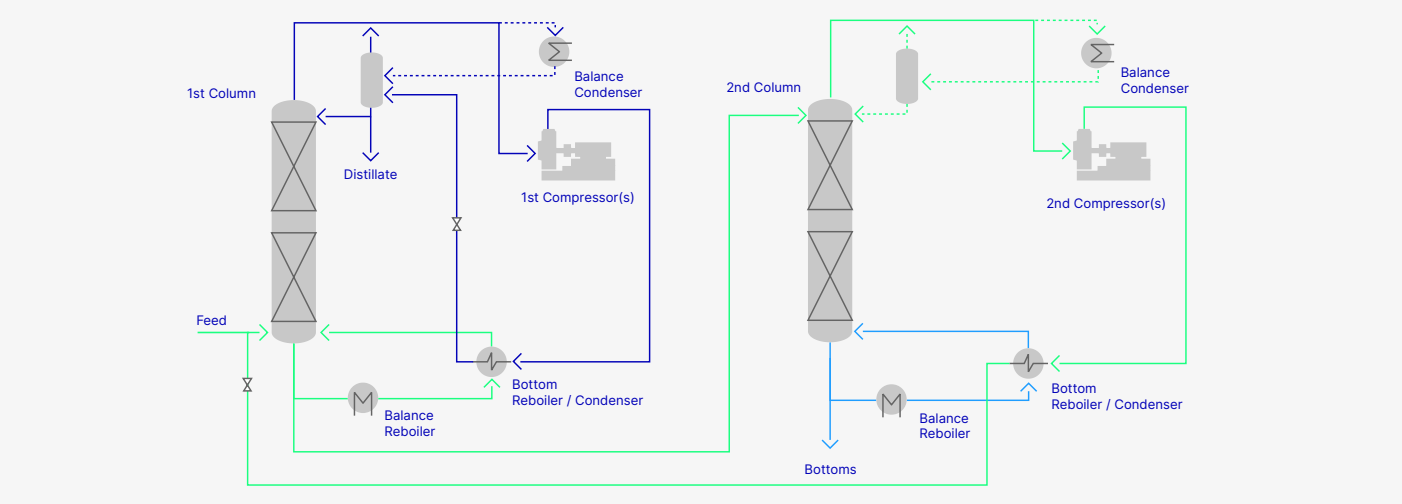

MVR with two columns for temperature senstive liquids

A stronger tendency to fouling in the bottom reboiler can mostly be remedied by applying the following design (GEA patent) which is based on lowering the operating pressure in the stripping part.

In the first column, the low boilers are rectified to the required concentration, while the bottoms are transferred to the second column.
The head vapors of the first column are compressed by a MVR and used to heat the reboiler of the first column.
The tube side of this reboiler is operated at a relatively low temperature level due to the comparatively high proportion of low boilers.

The low boilers from bottoms of the first column are then depleted to the desired concentration in the second column. The head vapor from the second column is compressed to a higher pressure level by one or more MVRs and then used to heat the bottom reboiler of the second column. The distillate produced in the shell side of the bottom reboiler is returned to the bottom of the first column for further concentration.

The design described above has been patented by GEA. (Patent number WO 2013/037712 A1)



MVR distillation for NMP recovery

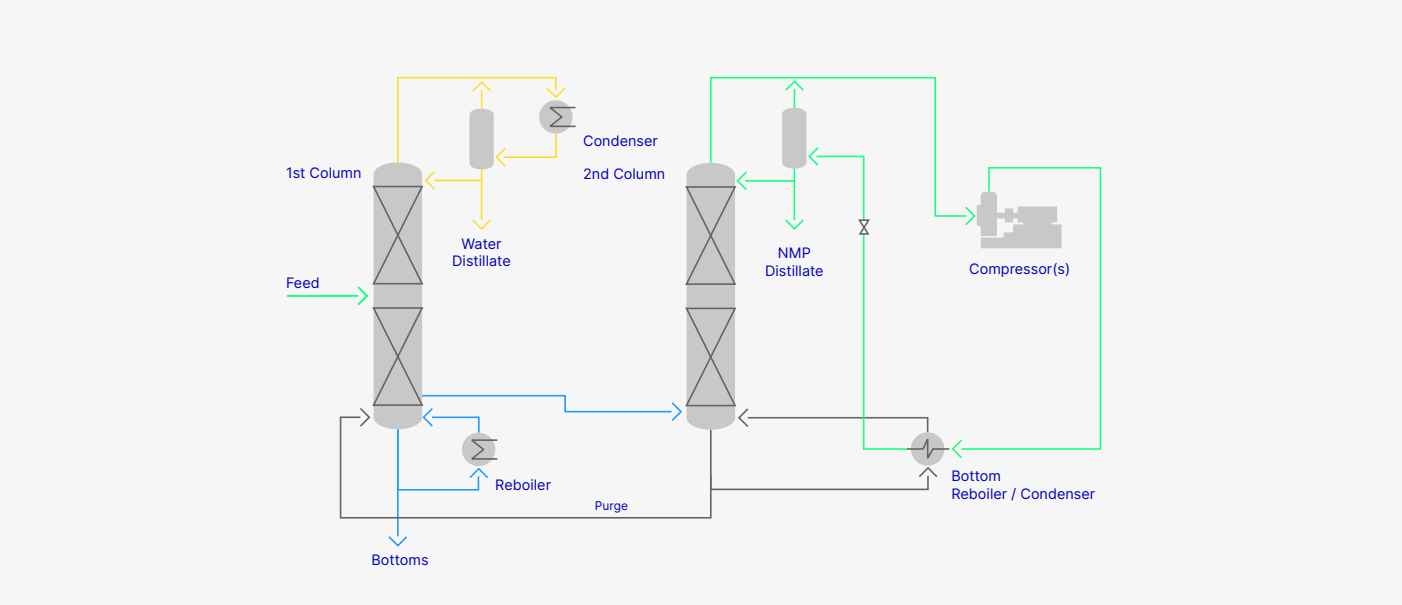

MVR distillation for concentration of high boiling solvents

In the recovery of high boiling solvents (such as NMP or DMF), water is the low boiler, while the solvent can be separated from dissolved solids (e.g. polymers) and purified by distillation.

In a first column, water is drawn off overhead, condensed and pumped out of the plant. The solvent (with impurities) is drawn off in liquid form from a lower separation stage via a side draw, while the solids are taken out as bottoms.
The impure solvent is fed to the sump of the purification column where the solvent is evaporated and withdrawn overhead while the impurities are concentrated in the sump and returned to the sump of the first column.
The overhead vapor from the second column is sucked in by a MVR, compressed to a higher pressure and temperature level and used to heat the bottom reboiler. The solvent condenses in the shell side of the reboiler and is finally pumped out of the plant. This design suits best to solvent / water mixtures with low water content in the feed and high boiling point differences between water and the solvent. (GEA can also offer an alternative setup for high water contents.)

According to the COP estimation curve on page 5, a boiling point difference of e.g. 100 K would automatically lead to a COP < 3 for the first column, which might be not favorable. The solvent distillation in the purification column (which normally represents the major energy demand) can be carried out at temperature differences of < 10 K, resulting in COP values > 20.

The design described above has been applied for patent by GEA.

DISTILLATION – UNLIMITED APPLICATIONS

Chemical Industry
- Alcohols
- Esters
- Ethers
- Ketones
- Alkanes/Aliphatics
- Aromatics
- Chlorinated Solvents, Bio-Solvents or other Solvents

Biotech & Renewables
- Alcohol/Solvent-Dehydration with Molecular Sieves or Entrainers
- Glycerol/Methanol separation for Biodiesel
- Recycle of NMP/others in battery production
- HTF-Recovery for Solar Power Plants
- Bioethanol and advanced Biofuels

Pharma & Health Care
- Ethanol cleaning in Blood Plasma Fractionation
- NMP/DMAc/GBL Recycle at Membrane-Producers

Food & Beverage
- IPA-recovery in Pectin, Xanthan Production
- Drinking Alcohol & Liquor Production









PERFORMANCE PARTNERSHIP

Empower your business with a partnership designed to optimize your performance. Together with you, we create services that matter: We focus on your specific goals and help you increase **Availability**, **Productivity** and **Sustainability** – enabled by digitalization.



AVAILABILITY PRODUCTIVITY SUSTAINABILITY

Enabled by digitalization.

Enhancing Availability

Proactively minimize down-time with maintenance strategies and innovative technologies that ensure smooth, uninterrupted operations.

Boosting Productivity

Optimize efficiency with process improvements, staff training, and action-able, data-driven insights to maximize your produc-tion potential.

Driving Sustainability

Reduce environmental impact, improve resource-efficiency, and extend machine lifespans with tailored solutions and expert support.

Enabled by digitalization

- **Optimize and automate** your processes
- **Solve problems early** with predictive analytics
- **Identify untapped opportunities** through actionable insights
- **Make data-based decisions –** anytime, anywhere

Let's talk to unlock your full potential

GEA.com/service

GEA Wiegand
Am Hardtwald 1
76275 Ettlingen, Germany

Tel +49 7243 705-0

gea.com/gea-mevap-distillation

BTC0110-EN1126 © GEA Wiegand GmbH. All rights reserved. Published on 06/27/2023 Trademarks shown are registered in several countries worldwide. Subject to modifications.