

Aseptic Valves

GEA Aseptomag® stop valve type AMV

Operating instruction (Translation from the original language)

430BAL013317EN_1

engineering for a better world

gea.com

COPYRIGHT

These Operating Instructions are the English translation of the original operating instructions in the sense of the EU Machinery Directive. This document is protected by copyright. All rights reserved. The document may not, in whole or in part, be copied, reproduced, translated or reduced to an electronic medium of machine-readable form without the express permission of GEA Tuchenhagen GmbH.

LEGAL NOTICE

Word marks

Aseptomag® and TEFASEP® are registered trademarks of GEA Aseptomag AG and may not be used without the permission of GEA Aseptomag AG.

T.VIS® is a protected trademark of GEA Tuchenhagen GmbH.

We kindly request that you answer a few short questions about these Operating Instructions. Use the following QR code or link to access the questionnaire:

https://www.ntgt.de/ra/s.aspx?s=367112X57707125X58087

TABLE OF CONTENTS

1 General Information 5
1.1 Information on the Document 5
1.1.1 Binding Character of These Operating Instructions 5
1.1.2 Notes on the Illustrations 5
1.1.3 Symbols and Highlighting 5
1.2 Manufacturer address 6
1.3 Customer service 6
1.4 EC Declaration of Incorporation 7
2 Safety 8
2.1 Intended use 8
2.1.1 Requirements for operation 8
2.1.2 Pressure equipment directive 8
2.1.3 ATEX directive 8
2.1.4 Improper operating conditions 8
2.2 Operator’s Duty of Care 9
2.3 Subsequent changes 10
2.4 General safety instructions and dangers 10
2.4.1 Principles for safe operation 10
2.4.2 Environmental Protection 10
2.4.3 Electrical Equipment 11
2.5 Supplementary Regulations 11
2.6 Qualification of personnel 11
2.7 Safety equipment 12
2.7.1 Signage 13
2.8 Residual dangers 13
2.9 Danger zones 14
3 Description 15
3.1 Design of the Valve 15
3.2 Valve Identification 16
3.3 Valve settings with manual actuation 18
3.3.1 Valve with hand wheel 18
3.4 Sealing Concepts 19
3.4.1 "Shrink-on Fit" Version 19
3.4.2 System “integrated valve seat seal” 19
4 Transport and storage 20
4.1 Storage conditions 20
4.2 Transport 20
4.2.1 Scope of supply 20
5 Technical data 21
5.1 Technical data 21
6 Assembly and installation 23
6.1 Safety instructions 23
6.2 Notes on installation 23
6.3 Welding In a Valve with Pipe Connection 23
6.3.1 Welding In and Installing a Valve 23
6.3.2 Welding post-treatment 24
6.4 Pneumatic connections 24
6.4.1 Air Requirement 24
6.4.2 Establishing the Compressed Air Supply 25
6.5 Electrical connections 26
7 Start-up 27
7.1 Safety instructions 27
7.2 Notes on commissioning 27
8 Operation and control 28
8.1 Safety instructions 28
9 Cleaning 29
9.1 Cleaning 29
9.2 Sterilisation 29
9.3 Passivation 29

10 Maintenance 30
10.1 Safety instructions 30
10.2 Inspections 31
10.2.1 Bellows 31
10.2.2 Pneumatic connections 31
10.2.3 Electrical connections 31
10.3 Maintenance intervals 31
10.4 List of tools 32
10.5 Prior to disassembly 34
10.6 Disassembling and Assembling the Valve 34
10.6.1 Disassembling the Valve 34
10.6.2 Assembling the Valve 36
10.6.3 Torques for clamp 36
10.7 Disassembling and Assembling the Internal Assembly 36
10.7.1 Disassembling the Internal Assembly 36
10.7.2 Assembling the Internal Assembly 38
10.8 Removing and Installing the "Shrunk-on” Valve Seat Seal 39
10.8.1 Removing the Shrunk-on Valve Seat Seal 39
10.8.2 Fitting the Shrunk-on Valve Seat Seal 39
10.9 Carrying out the "Internal assembly" leak test (bubble test) 41
10.10 Disassembling and assembling actuator PA35 PV 44
10.10.1 Disassembling actuator PA35 PV 44
10.10.2 Assembling actuator PA35 PV 48
10.11 Disassembling and assembling actuator PA35 PV H 49
10.11.1 Disassembling actuator PA35 PV H 49
10.11.2 Assembling actuator PA35 PV H 51
10.12 Maintenance 52
10.13 Checking the Feedback Unit 53
10.13.1 Setting the Feedback Unit 53
10.13.2 Valve Stroke 55
11 Alarms 56
11.1 Malfunctions and remedies 56
12 Decommissioning 57
12.1 Safety instructions 57
12.2 Disposal 57
12.2.1 General notes 57
13 Appendix 58
13.1 Lists 58
13.1.1 Abbreviations and terms 58

1 General Information

1.1 Information on the Document

The present Operating Instructions are part of the user information for the product. The Operating Instructions contain all the information you need to transport, install, commission, operate and carry out maintenance for the product.

1.1.1 Binding Character of These Operating Instructions

These Operating Instructions contain the manufacturer's instructions to the operator of the component and to all persons who work on or use the component regarding the procedures to follow.

Carefully read these Operating Instructions before starting any work on or using the component. Your personal safety and the safety of the component can only be ensured if you act as described in the Operating Instructions.

Store the Operating Instructions in such a way that they are accessible to the operator and the operating staff during the entire life cycle of the component. When the location is changed or the component is sold make sure you also provide the Operating Instructions.

1.1.2 Notes on the Illustrations

The illustrations in these Operating Instructions show the product in a simplified form. The actual design of the product can differ from the illustration. For detailed views and dimensions of the product please refer to the design documents.

1.1.3 Symbols and Highlighting

In these Operating Instructions, important information is highlighted by symbols or special formatting. The following examples illustrate the most important types of highlighting.

Danger

Warning: Fatal Injuries

Failure to observe the warning can result in serious damage to health, or even death.

► The arrow identifies a precautionary measure you have to take to avoid the hazard.

Warning: Explosions

Failure to observe the warning can result in severe explosions.

► The arrow identifies a precautionary measure you have to take to avoid the hazard.

Warning!

Warning: Serious Injuries

Failure to observe the warning can result in serious damage to health.

► The arrow identifies a precautionary measure you have to take to avoid the hazard.

Caution!

Warning: Injuries

Failure to observe the warning can result in minor or moderate damage to health.

► The arrow identifies a precautionary measure you have to take to avoid the hazard.

Notice

Warning: Damage to Property

Failure to observe the warning can result in serious damage to the component or in the vicinity of the component.

► The arrow identifies a precautionary measure you have to take to avoid the hazard.

Carry out the following steps: = Start of a set of instructions.

1. First step in a sequence of operations.
2. Second step in a sequence of operations.

   → Result of the previous operation.

→ The operation is complete, the goal has been achieved.

Hint!

Further useful information.

1.2 Manufacturer address

GEA Aseptomag AG
Industrie Neuhof 28
CH-3422 Kirchberg

1.3 Customer service

Phone: +41 (0)34 426 29 29
Fax: +41 (0)34 426 29 28

service.aseptomag@gea.com
www.gea.com

1.4 EC Declaration of Incorporation



engineering for a better world

Declaration of Incorporation

Kirchberg, 16.12.16

According 2006/42/EC from 09.06.2006, appendix II B

INCORPORATION OF PARTLY COMPLETED MACHINERY

We herewith declare that the subsequently described partly completed machine complies with the below listed essential requirements of the machine directive 2006/42/EC. The technical documentation is compiled in accordance with part B of Annex VII. In response to reasonable request the relevant technical documentation will be provided to the national authorities in printed or electronic format (PDF).

Manufacturer:	**GEA Aseptomag AG** **Industrie Neuhof 28** **CH-3422 Kirchberg**
Authorized person:	**GEA Aseptomag AG** **Engineering Department** **Industrie Neuhof 28** **CH-3422 Kirchberg**
Commercial name of the machine:	**Valve**
Machine type:	**Aseptomag® Valve Technology**
Serial number:	**xxxx yy (x = serially numbered, y = year of manufacture)**
Respective EC standard:	**2006/42/EC**
Essential requirements:	**Appendix I, section 1 and 2.1**
Applied harmonized standards:	**DIN EN ISO 12100:2010**

The commissioning of this partly completed machine is prohibited until the final machinery into which it is to be incorporated has been declared in conformity with the provisions of the Machine Directive 2006/42/EC.

Reimar Gutte
Management Board
GEA Aseptomag AG

i.A. Aron Stauffer
Teamleader Product Development
Flow Components – Aseptic Valves

GEA Aseptomag AG
Tel. +41 34 426 29 29 · Fax +41 34 426 29 28 · gea.com
Industrie Neuhof 28, CH-3422 Kirchberg

Seite 1 von 1

2 Safety

2.1 Intended use

Aseptic stop valves of type AMV are stroke valves and are used for opening and closing pipes in aseptic process plants in a controlled manner. Welded metal bellows (or PTFE bellows as an option) are used to hermetically seal the valve disc. Selected sealing materials in the product chamber ensure optimum tightness. The valve offers a high degree of process reliability and product quality in aseptic working processes. The compact and virtually pocket-free design covers a versatile range of applications in pilot systems and very small plant construction.

Pressure hammers and excessive control air pressures can destroy the bellows. Therefore, for valves with pneumatic actuator, the control air pressure should not exceed 8 bar and pressure hammers in the system should be avoided.

The aseptic stop valve AMV should close against the direction of flow of the medium if possible. Should this not be possible due to technical reasons related to the plant or process, the valve must be depressurized. Both measures prevent pressure hammers when the valve is opened or closed.

The valve is monitored, controlled and operated by the customer's system.

Hint!

The manufacturer will not accept any liability for damage resulting from any use of the valve which is not in accordance with the designated use of the valve. The risk is borne solely by the operating company.

2.1.1 Requirements for operation

The prerequisite for reliable and safe operation of the component is proper transportation and storage as well as professional installation and assembly. Operating the unit within the limits of its designated use also involves adhering to the operating, inspection and maintenance instructions.

2.1.2 Pressure equipment directive

The valve is a piece of pressure equipment (without safety function) as defined in the Pressure Equipment Directive: Directive 2014/68/EG. It is classified according to Annex II, article 4, section 3. In the event of any deviations, GEA Aseptomag AG will supply a specific Declaration of Conformity.

2.1.3 ATEX directive

Aseptomag ® valve technology can also be used in ATEX protected areas. However, the suitability of the component must be checked under consideration of the respective conditions. Additional information will be made available upon request.

2.1.4 Improper operating conditions

The operational safety of the component can not be guaranteed under improper operating conditions. Therefore avoid improper operating conditions.

The operation of the component is not permitted if:

- Persons or objects are in the danger zone.
- Safety devices are not working or were removed.
- Malfunctions have been detected on the component.
- Damage to the component has been detected.
- Maintenance intervals have been exceeded.
- Clamp connections or screw fastenings on the housing are not properly fastened and secured against accidental loosening.

2.2 Operator’s Duty of Care

The operating company of the component has a special responsibility for the proper and safe handling of the component within their company. Only use the component when it is in perfect operating condition in order to prevent danger to persons and property.

This operating manual contains information that you and your employees need for safe operation over the life of the component. Be sure to read these Operating Instructions carefully and ensure that the measures described here are observed.

The operator's duty of care includes planning the necessary safety measures and monitoring that these measures are observed. The following principles apply:

- Only qualified personnel may work on the component.
- The operating company must authorize personnel to carry out the relevant tasks.
- Order and cleanliness must be maintained at the work stations and in the entire area surrounding the component.
- Personnel must wear suitable work clothing and personal protective equipment. As the operating company must ensure that work clothing and personal protective equipment are used.
- Inform personnel regarding any properties of the product which might pose a health risk and the preventative measures to be taken.
- Have a qualified first-aid representative on call during the operation. This person must be able to initiate any necessary first-aid measures in case of an emergency.
- Clearly define procedures, competences and responsibilities for those working in the area of the component. Everybody must know what to do in case of an emergency. Instruct the staff in this respect at regular intervals.
- The signs on the component must always be complete and easy to read. Check, clean and replace the signs as necessary at regular intervals.
- Observe the Technical Data specified and the limits of use!

Hint!

Carry out regular checks. This way you can ensure that these measures are actually observed.

2.3 Subsequent changes

You should never make any technical modifications to the valve. Otherwise you will have to undergo a new conformity process in accordance with the EC Machinery Directive on your own.

In general, only original spare parts supplied by GEA Aseptomag AG should be fitted. This ensures the reliable and economical operation of the valve.

2.4 General safety instructions and dangers

The component is safe to operate. It was built according to state-of-the-art science and technology.

Nevertheless, dangers can arise from the component, if:

- the component is not used as intended
- the component is used improperly
- the component is operated under impermissible conditions

2.4.1 Principles for safe operation

Dangerous situations during operation can be avoided by safety-conscious and proactive behaviour of the staff.

To ensure safe operation of the valve the following principles apply:

- The Operating Instructions must be kept ready to hand at the valve's place of use. They must be complete and in clearly legible form.
- Only use the valve for its intended use.
- The valve must be functional and in good working order. Check the condition of the valve before starting work and at regular intervals.
- Wear tight-fitting work clothing for all work on the valve.
- Ensure that nobody can get hurt on the parts of the valve.
- Immediately report any faults or noticeable changes on the valve to the person responsible.
- Never touch the pipes and the valve when these components are hot! Avoid opening the valve unless the process plants have been emptied and depressurised.
- Observe the accident prevention regulations and all local regulations.

2.4.2 Environmental Protection

Harm to the environment can be avoided by safety-conscious and proactive behaviour of the staff.

For environmental protection the following principles apply:

- Substances harmful to the environment must not be discharged into the ground or the sewage system.
- Always observe the pertinent regulations relating to waste avoidance, disposal and utilization.
- Substances harmful to the environment must be collected and stored in suitable containers. Clearly mark the containers.
- Dispose of lubricants as hazardous waste.

2.4.3 Electrical Equipment

For all work on electrical equipment, the following principles apply:

- Access to electrical equipment should only be allowed to qualified electricians. Always keep unattended switch cabinets locked.
- Modifications of the control system can affect the safe and reliable operation. Modifications are only permitted with the express permission of the manufacturer.
- After completion of all work, check that the protective devices are fully functional.

2.5 Supplementary Regulations

In addition to the instructions in this documentation the following also has to be observed:

- pertinent accident prevention regulations,
- generally accepted safety rules,
- national regulations applicable in the country of use,
- work and safety instructions applicable in the facility,
- installation and operating regulations for use in potentially explosive areas.

2.6 Qualification of personnel

This section provides information on how the personnel working on the component must be trained.

Operating and maintenance personnel must

- have the necessary qualification to carry out their tasks,
- be instructed with regard to possible dangers,
- know and observe the safety instructions given in the documentation.

Only allow qualified electricians to carry out work on the electrical equipment or have a qualified electrician supervise the work.

Only allow specially trained personnel to carry out work on an explosion-protected system. When working on explosion-protected equipment observe the standards DIN EN 60079-14 for gases and DIN EN 50281-1-2 for dusts.

The following minimum qualifications are required:

- Training as a specialist for working independently on the component.
- Adequate instruction to work on the component under the supervision and guidance of a trained specialist

Each employee must meet the following requirements to work on the component:

- Personal suitability for the respective task.
- Sufficient professional qualification for the respective task.
- Received instruction about the functionality of the component.
- Received instruction about operating sequences on the component.
- Familiar with the safety devices and their function.
- Familiar with these Operating Instructions, especially with the safety instructions and the information which is relevant for the task on hand.
- Familiar with the basic regulations with regard to occupational health and safety and accident prevention.

When working with the component, a distinction is made between the following user groups:

User groups	
Staff	**Qualifications**
Operating personnel	Adequate instruction and sound knowledge in the following areas: • Functionality of the component • Operating sequences on the pump • What to do in case of an emergency • Lines of authority and responsibilities with respect to the task
Maintenance personnel	Appropriate training and a sound knowledge of the structure and functionality of the component. Sound knowledge in the following areas: • Mechanical equipment • Electrical equipment • Pneumatic system Authorization with regard to safety engineering standards to carry out the following tasks: • Setting devices into operation • Earthing of devices • Marking of devices The relevant certificates of qualification must be submitted before work can be carried out on ATEX certified machines.

2.7 Safety equipment

2.7.1 Signage

No warning signs are affixed to this valve.

2.8 Residual dangers

Dangerous situations can be avoided by safety-conscious and proactive behaviour of the personnel and by wearing personal protective equipment.

Residual dangers on the valve and measures		
Danger	**Cause**	**Measure**
Danger to life	Inadvertent switch-on of the valve	Effectively disconnect all components, effectively prevent switch-on.
	Electric power	Observe the following safety rules: 1. Isolate from the power supply. 2. Take appropriate measures to prevent switch on. 3. Test absence of voltage. 4. Earthing and short-circuiting. 5. Cover or safeguard any adjacent live parts.
Risk of injury	• Danger presented by moving or sharp-edged parts • Danger due to escaping media with properties that are dangerous to health	Effectively prevent unauthorised persons from manipulating the valve. The operator must exercise caution and prudence. For all work: • Wear suitable work clothing. • Never operate the machine if the cover panels are not correctly fitted. • Never open the cover panels during the operation. • Never reach into openings. As a precautionary measure, wear personal protective equipment in the vicinity of the valve: • Protective gloves • Safety shoes
Environmental damage	Operating materials with properties which are harmful to the environment	For all work: • Collect lubricants and cleaning solutions in suitable containers. • Dispose of lubricants and cleaning solutions in accordance with the pertinent regulations.

2.9 Danger zones

Please observe the following notes:



Fig.1: Danger zone at the valve

- In the event of malfunctions, shut down the valve (disconnect from the power and air supply) and secure it against being used.
- Never reach into the valve housing (1) when the valve is switching. There is a danger of injury to fingers.
- With a closed valve there is danger of injury when the clamp (2) is opened since the released closing pressure will suddenly lift the actuator. Therefore, release the closing pressure by opening the valve before detaching the clamp (2) by supplying the actuator (A) with compressed air.
- Before starting any service, maintenance or repair work, disconnect the valve from the power supply and secure it against inadvertently being switched back on again.
- Only allow a qualified electrician to carry out any work on the electrical power supply.
- Check the electrical equipment of the valve at regular intervals. Immediately remedy loose connections and molten cables.
- If work on live parts cannot be avoided, call in a second person, who can operate the main switch in case of an emergency.
- The housing sockets have very sharp edges. When transporting and assembling the valve be sure to wear suitable protective gloves.

3 Description

3.1 Design of the Valve



Fig.2: Main components on the valve

Key	
No.	**Designation**
1	Housing
2	Internal assembly
3	Actuator
4	Clamp (safety device)

3.2 Valve Identification

Reference numbers from the following number systems are assigned to each part of components from GEA Aseptomag AG. The reference numbers can be used to clearly identify a component and its composition.

Number (Example)	Designation	Description
0001 14	Serial valve number	The valve serial number is the easiest and most definite way to identify a component from GEA Aseptomag AG. This number is unique and allows all components installed at the time of delivery to be identified. The first four digits represent a chronological, ascending number, the last two digits provide information about the year of manufacture. The valve's serial number is indicated on a round white sticker affixed to the actuator.
0001 14	Serial number main components	The serial number has the same structure as the valve's serial number, but it is placed on the relevant main component (housing, internal assembly, actuator) by laser marking / stamping.
V-50-1001	Drawing number	The drawing number is a combination of two groups. The digits in front of the hyphen refer to where the components belong to. The next four numbers describe the part in more detail. For this purpose, the main component groups of a valve are assigned to various groups: • V-xx-0xxx = entire valves • V-xx-1xxx = valve housings • V-xx-2xxx = internal assemblies • V-xx-3xxx = actuators • V-xx-4xxx = feedback units / accessories

Each of these main components is marked and can be uniquely identified.

! Other markings on components of the valve, such as on connectors, arise from the production process and are not relevant.

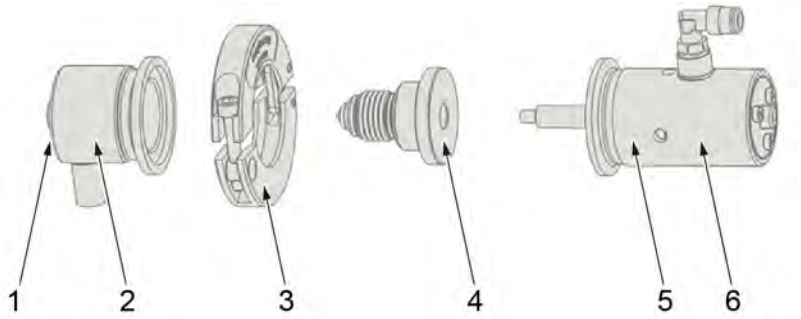

Fig.3: Designations on the valve

Key			
No.	**Example**	**Position**	**Details**
1	V-10-1047 1.4435 TC 333937	Valve housing	Drawing number of valve housing Material and re-stamping details
2	0548 10	Valve housing	Serial number of valve housing
3	V-15-1004	Clamp	Number of clamp drawing
4	V-10-2043 1424 10	Internal assembly	Drawing number of internal assembly Serial number of internal assembly
5	1216 10	Actuator	Sticker with valve serial number
6	PA35 P PV10 V-10-3012 0977 10	Actuator	Designation of actuator Number of actuator drawing Serial number of actuator

3.3 Valve settings with manual actuation

3.3.1 Valve with hand wheel

- Hand wheel with marker disc (H)



Fig.4: Valve closed

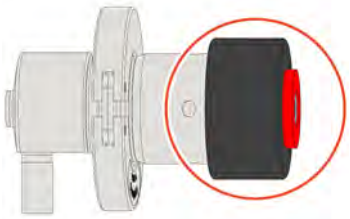

Fig.5: Valve open

3.4 Sealing Concepts

3.4.1 "Shrink-on Fit" Version

- Undivided valve disc
- Metal bellows
- For hard sealing materials such as PTFE



Fig.6: "Shrink-on Fit" version

3.4.2 System “integrated valve seat seal”

- Undivided valve disc
- PTFE bellows
- PTFE valve disc adopts sealing function



Fig.7: System "integrated valve seat seal"

4 Transport and storage

4.1 Storage conditions

The valves, valve inserts or spare parts should be stored in a dry place, free of vibrations and dust, and protected from light. To avoid damage, leave the components in their original packaging if possible.

If, during transport or storage, the valve is going to be exposed to temperatures ≤ 0°C, it must be dried beforehand and suitable measures must be taken to protect it from damage.

Hint!

We recommend that the valve should be stored at a temperature of ≥ 5 °C for a period of 24 hours prior to any handling (disassembling the housings / activation of actuators) so that any ice crystals formed by condensation water can melt.

4.2 Transport

For transport, the following principles apply:

- Only use suitable lifting gear and slings for transporting the package units/ valves.
- Observe the pictograms on the package.
- Handle valves with care to avoid damage caused by impact or careless loading and unloading. The outside synthetic materials are susceptible to breaking.
- Control tops (if fitted) must be protected from animal and vegetable fats.
- Only allow qualified staff to transport the valve.
- Movable parts must be properly secured.
- Only use approved, fully functional load lifting devices and lifting accessories which are suitable for the intended purpose. Observe the maximum load-bearing capacities.
- Secure the valve against slipping. Take the weight of the valve into account and the position of the point of gravity.
- Under no circumstances should anyone stand under a suspended load.
- Take care when transporting the valve. Do not grip sensitive parts of the unit to lift or push the unit or to support yourself. Avoid putting the unit down with a jerk.

4.2.1 Scope of supply

On receipt of the valve check whether

- the details on the main valve components correspond to the data in the order and delivery documents,
- the equipment is complete and all components are in good order.

5 Technical data

5.1 Technical data

Operating data (for valve with sealing material EPDM)	
Max. operating temperature	135 °C (275 °F)
Max. sterilisation temperature	150 °C (302 °F) for max. 30 min.
Max. product pressure	6 bar (others on request)
Control air pressure, actuator	6 bar, max. 8 bar
Nominal pressure	10 bar

Materials	
Parts in contact with product	1.4404 (AISI 316L) 1.4435 (AISI 316L) 1.4571 (AISI 316TI)
Actuator (exterior area)	1.4301 (AISI 304) 1.4305 (AISI 304)
Valve seat seal (product-contacting)	PTFE
Seal (product-contacting)	EPDM
Other materials in accordance with the valve specification.	

Surface finish	
Inside areas in contact with product	Surface roughness $R_a \leq 0.8$ µm (standard)
Outer surfaces	Metal blank fine turned and/or polished
Inside areas (with the exception of the metal bellows) in contact with product can be electropolished/passivated or ground on request. These methods will bring up surface roughness to $R_a \leq 0.6$ µm / 0.4 µm.	

Resistance of sealing materials	
Product contact seals	All sealing materials in the product contact area are suitable for applications in the food industry. The durability of the sealing materials depends on the type, temperature and contact time of the conveyed media. The final assessment of the suitability of the material is therefore the sole responsibility of the plant operator, even if the materials meet all common guidelines of the food industry (for further information see material certificates).

Compressed air supply	
Compressed air supply	6 bar, compressed air filtered (at least 0,5 µm), oil-free.

Cleaning	
Cleaning	The valve is suitable for CIP cleaning (Cleaning in Place)
Recommended cleaning speed in the valve	At least 2 m/s

Sterilisation	
Sterilisation	The valve is suitable for SIP sterilisation (Sterilisation in Place)
Sterilisation with	Hot water, max. 150 °C (302 °F) Steam, max. 150 °C (302 °F) Chemicals (e.g. H_2O_2)

6 Assembly and installation

6.1 Safety instructions

Hazardous situations during installation can be avoided by safety-conscious and proactive behaviour of the personnel.

For installation, the following principles apply:

- Only qualified personnel are allowed to set-up, install and commission the component.
- Ensure that adequate working and traffic areas are available at the place of installation.
- Observe the maximum load-bearing capacity of the installation surface.
- Observe the transport instructions and markings on the part(s) to be transported.
- Remove any nails protruding from transport crates immediately after opening the crate.
- Under no circumstances should anyone stand under a suspended load.
- Safety devices of the component may not work effectively during installation.
- Reliably secure sections of the plant which have already been connected against inadvertently being switched on.

6.2 Notes on installation

The valve must be installed so that the housing can drain on its own.

To prevent damage, make sure that:

- the valve is installed in the pipe system free of tension.
- no foreign materials (e.g. tools, bolts, lubricants) are left in the system
- the valve is installed so that the flow is directed against the valve disc.

6.3 Welding In a Valve with Pipe Connection

6.3.1 Welding In and Installing a Valve

This section describes how you weld in a valve with pipe connection.

Prerequisite:

- For valves with welding ends: Actuator and internal assembly have been removed, see Section 10.6, Page 34.

⚠ Caution!

Danger of injury due to spring force being released

You can sustain injuries to your fingers when you put your hand into a valve if the valve has not been moved to the open position beforehand.

► Before starting any work, bring the valve to the "open" position.
► Wear protective gloves for all work.
► Always exercise caution and prudence.

⚠ Caution!

If pipes contain liquids, these can spurt out when the pipes are opened.

Danger of injury as a result of hot or aggressive liquids.

► Drain all pipe system elements that lead to the valve location and, if necessary, clean or rinse them.
► Separate the pipe section in which the valve is to be fitted from the rest of the piping system to prevent medium from entering again.

Carry out the following steps:

1. Saw the pipe ends flat and square, deburr and degrease them.
2. Prepare the component housing so that the component housing can be welded into position free from stress and distortion.
3. Prepare the welding procedure: use the 141 TIG (tungsten inert gas) welding method with butt weld. I-joint according to DIN8532; hand or orbital weld.
4. Connect the forming gas.
5. Tack the component housing at several points distributed around the circumference under forming gas (ensure forming gas supply).

   ! Adjoining welding ends must not be separated by a gap. Otherwise the corrosion resistance of the welded joint and the pipe will be reduced when forming gas flows out.
6. Weld the housing into the pipe system.

→ The valve has been welded in and installed.

6.3.2 Welding post-treatment

Interior

As long as forming and welding were carried out professionally, post-treatment of the interior surfaces is not necessary.

Exterior area

Depending on the requirements, post-treatment in the exterior area consists of:

- pickling,
- grinding,
- brushing,
- polishing.

6.4 Pneumatic connections

6.4.1 Air Requirement

The air requirement depends on the type of actuator fitted. The following tables show guideline values at an air pressure supply of 6 bar per valve size and the corresponding actuator size used as a standard.

Air requirement for opening the actuators				
Nominal width of valve		**Actuator**	**Reference stroke**	**Air Requirement**
DN	**OD**		**[mm]**	**[dm^3_N]**
DN 6	--	PA35 NC	2	0.03
DN 8	--	PA35 NC	2	0.03
DN 10	OD ½"	PA35 NC	2	0.03
DN 15	OD ¾"	PA35 NC	5	0.05

6.4.2 Establishing the Compressed Air Supply

A prerequisite for the reliable operation of the valve is that the compressed air hoses are cut exactly square.

Tools required:

- A hose cutter

Carry out the following steps:

1. Depressurize the pneumatic connection at the place where you are working.
2. Use the hose cutter to cut the pneumatic hoses square.
3. Connect a hose to the valve.

→ The compressed air supply has been established.

6.5 Electrical connections

Requirement:

- The valve has been fitted correctly, see Section 10.6, Page 34.

Danger

Live parts

Electrical shock can result in serious personal injury or death.

► Only allow properly qualified staff to carry out work on the electrical equipment.
► Prior to establishing electrical connections check the maximum permissible operating voltage.

Explosive gases or dusts

An explosion can result in serious personal injury or death.

► Observe the installation and operating regulations for use in potentially explosive areas.

Carry out the following steps:

1. Connect in accordance with the control top diagram and the instructions in the corresponding operating instructions for the T.VIS control top or other models.

→ The valve has been connected electrically.

7 Start-up

7.1 Safety instructions

Initial commissioning

For initial commissioning, the following principles apply:

- Take protective measures against dangerous contact voltages in accordance with pertinent regulations.
- The valve must be completely assembled and correctly adjusted. All screw connections must be securely tightened. All electrical cables must be installed correctly.
- Reliably secure machine parts which have already been connected against inadvertently being switched on.
- Relubricate all lubricating points.
- Make sure lubricants are used properly.
- After conversion of the valve, residual risks must be reassessed.

Setting into Operation

For commissioning, the following principles apply:

- Only allow properly qualified staff to set the valve into operation.
- Establish all connections correctly.
- The safety devices for the valve must be complete, fully functional and in perfect condition. Check the function before starting any work.
- When the valve is switched on, the danger zones must be free.
- Remove any liquids that have escaped without leaving residues.

7.2 Notes on commissioning

Before starting commissioning observe the following:

- Make sure that there are no foreign materials in the system.
- Actuate all positions of the valve once by applying compressed air or actuate them manually.
- Clean and sterilise the pipe system prior to the first product run.
- During commissioning, regularly check all sealing points for leaks. Replace defective seals.

8 Operation and control

8.1 Safety instructions

Dangerous situations during operation can be avoided by safety-conscious and proactive behaviour of the personnel.

For operation, the following principles apply:

- Monitor the component during operation.
- Safety devices must not be changed, removed or taken out of service. Check all safety devices at regular intervals.
- All guards and hoods must be fitted as intended.
- The installation location of the component must always be properly ventilated.
- Structural changes to the component are not permitted. Report any changes to the component immediately to the person in charge.
- Always keep danger zones clear. Do not leave any objects in the danger zone. Only allow persons to enter the danger zone when the machine is de-energized.
- Regularly check that all emergency stop devices are working correctly.

9 Cleaning

9.1 Cleaning

The valve is suitable for CIP (Cleaning in Place); recommended cleaning speed in the valve is at least 2 m/s.

All parts in contact with product must be cleaned at regular intervals. Always observe the safety data sheets issued by the cleaning agent manufacturers. Only use cleaning agents which do not cause damage to the seals and the inner parts of the valve.

With respect to the cleaning method and parameters like detergents, temperatures, times, and intervals, the component manufacturer can merely make recommendations but cannot provide any generally applicable details. Method and parameters should be determined and defined by the operator in accordance with the relevant process and product.

The cleaning effect must be checked regularly by the operating company!

9.2 Sterilisation

The valve is suitable for SIP sterilisation (Sterilisation in Place). For valves equipped with the sealing material EPDM, the following specifications apply.

Sterilisation is possible with:

- Hot water at max. 150 °C (302 °F) for 20 to 30 min
- Steam at max. 150 °C (302 °F) for 20 to 30 min
- Chemicals (e.g. H_2O_2)

9.3 Passivation

Before commissioning a plant, passivation is commonly carried out for long pipes and tanks. Valve blocks are usually excepted from this.

Passivation is typically performed using nitric acid (HNO_3) at approx. 80 °C (176 °F) at a concentration of 3 % and a contact time of 6 to 8 hours.

The ultimate temperatures, chemicals, concentrations and contact time to be used must be determined by the plant operator along with its chemical supplier.

10 Maintenance

10.1 Safety instructions

Maintenance and repair

Before carrying out maintenance and repair work on the component's electrical equipment, perform the following steps in accordance with the "5 safety rules":

- Isolate from the power supply
- Take appropriate measures to prevent switch on
- Test absence of voltage
- Earthing and short-circuiting
- Cover or safeguard any adjacent live parts.

For maintenance and repair, the following principles apply:

- Observe the intervals specified in the maintenance schedule.
- Only qualified personnel may carry out maintenance or repair work on the component.
- The component must be switched off and secured against being switched back on before maintenance or repair work. Work may only be started once any residual energy has been discharged.
- Block access for unauthorized persons. Put up notice signs which draw attention to the maintenance or repair work going on.
- Do not climb on the component. Use suitable access aids and working platforms.
- Wear suitable protective clothing.
- Only use suitable and undamaged tools to carry out maintenance work.
- When replacing parts only use approved, fully functional load lifting devices and lifting accessories which are suitable for the intended purpose.
- Before setting the unit back into operation, refit all safety devices as originally provided in the factory. Then check that all safety devices are working correctly.
- Make sure lubricants are used properly.
- Check pipes are firmly secured, also check for leaks and damage.
- Check that all emergency stop devices are working correctly.

Disassembly

For disassembly, the following principles apply:

- Only qualified personnel are allowed to dismantle the component.
- The component must be switched off and secured against being switched back on before it is dismantled. Work may only be started once any residual energy has been discharged.

- Disconnect all power and utility lines.
- Markings, e.g. on lines, must not be removed.
- Do not climb on the component. Use suitable access aids and working platforms.
- Mark the lines (if unmarked) prior to disassembly to ensure they are not confused when re-assembling.
- Protect open line ends with blind plugs against ingress of dirt.
- Pack sensitive parts separately.
- For longer periods of standstill, observe the storage conditions, see Section 4.1, Page 20.

10.2 Inspections

Between the maintenance periods, the valves must be checked for leakage and proper function.

10.2.1 Bellows

Carry out the following steps:

1. Check the leakage cavity for soiling and continuous leakage of fluids.

→ The bellows has been checked.

10.2.2 Pneumatic connections

Carry out the following steps:

1. Check the operating pressure at the pressure reducing and filter station.
2. Clean the air filter at regular intervals.
3. Check that the air hoses sit firmly in the air connections.
4. Check the lines for kinks and leaks.

→ The pneumatic connection has been checked.

10.2.3 Electrical connections

Carry out the following steps:

1. Check that the proximity switches are positioned correctly and the connections are clean.

→ The electrical connection has been checked.

10.3 Maintenance intervals

To ensure the highest operational reliability of the valve, all wearing parts should be replaced at longer intervals. Keep an adequate supply of all wearing parts (internal assemblies and seals) in your spare parts stock.

In practice, the actual maintenance intervals can only be determined by the user since they depend on the operating conditions.

Examples of relevant process parameters are:

- daily period of use,
- switching frequency,
- type and temperature of the product,
- type and temperature of the cleaning solution,
- ambient conditions.

If information regarding the definition of practical-oriented maintenance intervals is not available or is insufficient, the guideline values listed in the "Maintenance" chapter can be referred. This information is based on empirical values for GEA Flow Components and relates to installations working in two-shift operation.

10.4 List of tools

List of tools (in alphabetical order)			
Tool	**Figure**	**Intended Purpose**	**Material Number GEA Aseptomag AG**
Pressurizing tool DN 10 PV	 Fig.8	Valves DN 10 Inspection of metal bellows	0980.50133 S-12-0574
Pressurizing tool DN 15 PV		Valves DN 15 Inspection of metal bellows	0980.50068 S-12-0420
Pressure control valve Ø 6 mm	 Fig.9	Inspection of metal bellows	9999.10090
Oven (no microwave, min. temp. 140 °C)	 Fig.10	Preheat hard valve seat seals	0981.50016 S-12-0084

List of tools (in alphabetical order)			
Tool	**Figure**	**Intended Purpose**	**Material Number GEA Aseptomag AG**
Hex socket key SW2.5	 Fig.11	PA35 PV Remove/fit PA	--
Hex socket key SW4		PA35 PV H Remove/fit PA	0980.50113 S-12-0546
Hex socket key SW5		Valves DN 10 - DN 80 Tighten/release clamp	0980.50121 S-12-0554
Assembly tool for PA35	 Fig.12	PA35 PV assemble/disassemble	0980.50287 S-12-0766
O-ring cutter heated	 Fig.13	Remove hard, shrunk-on valve seat seals	0980.50022 S-12-0083

List of tools (in alphabetical order)			
Tool	**Figure**	**Intended Purpose**	**Material Number GEA Aseptomag AG**
Protective gloves, heat-resistant	 Fig.14	Remove/fit hard valve seat seals	--
Shut-off valve Ø 6 mm	 Fig.15	Inspection of metal bellows	9999.10091

10.5 Prior to disassembly

Prerequisite:

- Make sure that while work is being performed on the open valve no process is in operation in the area concerned.

Carry out the following steps:

1. Drain all pipe system elements that lead to the valve and, if necessary, clean or rinse, and also depressurize them.
2. Shut off the control air supply.
3. Disconnect the power supply.

→ Disassembly has been prepared.

10.6 Disassembling and Assembling the Valve

10.6.1 Disassembling the Valve

Tools required:

- Hex socket key

⚠ Caution!

Danger of injury due to spring force being released

You can sustain injuries to your fingers when you put your hand into a valve if the valve has not been moved to the open position beforehand.

► Before starting any work, bring the valve to the "open" position.
► Wear protective gloves for all work.
► Always exercise caution and prudence.

⚠ Caution!

Danger of injury due to media escaping after removing the clamp

You can sustain injuries to your entire body if you open a valve that is still under pressure from the medium.

► Ensure that the valve is no longer under medium pressure before removing the clamp.
► Wear suitable protective clothing for all work.
► Always exercise caution and prudence.

Carry out the following steps:

1. Bring the valve to the "open" position.

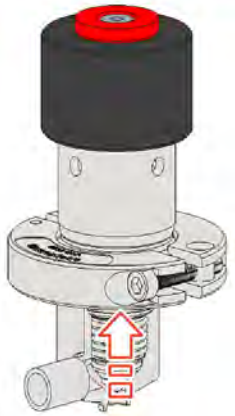

Fig.16: Opening valve NC

2. Release the clamp with a suitable hex socket key, but do not unhook the screw yet.



Fig.17: Loosening the clamp screw

! Make sure that the clamp can be moved by hand and without a great deal of force before you carry out the next step. If this is not the case, use a plastic hammer to knock the clamp segments carefully until the pressure escapes and the clamp can then be moved without any problem.

3. Carefully take off the clamp from the valve.
4. Carefully remove the actuator and internal assembly out of the housing.

! Do not damage the sealing surface on the valve body.



Fig.18: Removing actuator and internal assembly

→ Internal assembly and actuator are now separated from the housing.

10.6.2 Assembling the Valve

Tools required:

- Hex socket key

Carry out the following steps:

1. Install the valve in the reverse order of disassembly, see Section 10.6.1, Page 34.

   ! Note “Torques for clamps” table, see Section 10.6.3, Page 36

2. Test the function of the valve after assembling.

   ! Every possible position must be activated and held for 3-5 seconds to assure proper assembly and sealing.

→ The valve has been assembled.

10.6.3 Torques for clamp

Clamp screw thread size	Recommended torque [Nm]
M6	10

10.7 Disassembling and Assembling the Internal Assembly

10.7.1 Disassembling the Internal Assembly

⚠ Caution!

Danger of injury due to valve parts moved by compressed air!

You can sustain injuries to your fingers when you put your hand into the valve while it is switching.

► Wear protective gloves for all work.
► Always exercise caution and prudence.

Notice

Risk of damage to the metal bellow from torsion

The metal bellows are damaged if forces other than that for the valve stroke are applied or transferred.

► If possible, remove any objects that are hazardous for the bellows before working on the valve.
► Always exercise caution and prudence.

Requirement:

- Internal assembly and actuator have been separated from the housing, see Section 10.6, Page 34

Carry out the following steps:

1. Bring the actuator to the "closed" position.
2. Manually unscrew the internal assembly off the piston rod.

   ! With the inner assembly, ideally apply the force to the valve seat.

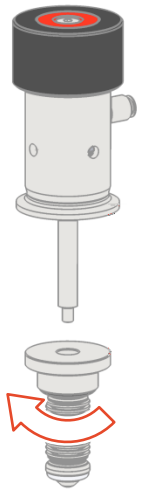

Fig.19: Unscrewing the internal assembly

3. With the PTFE bellows design: Pull the valve lid off the piston rod after the bellows on the PTFE valve disc have been unscrewed off the piston rod.

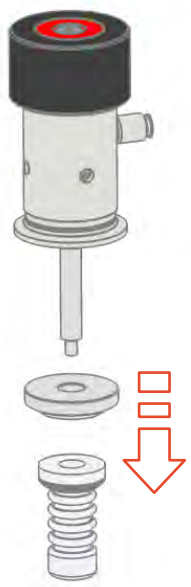

Fig.20: Removing the valve lid

4. Remove the housing seal without a tool.

   ! Do not damage the sealing surfaces on the housing and internal assembly.



Fig.21: Removing housing seal

→ The internal assembly has been disassembled.

10.7.2 Assembling the Internal Assembly

Carry out the following steps:

1. Install the internal assembly in the reverse order of disassembly, see Section 10.7.1, Page 36.

→ The internal assembly has been assembled.

Hint!

Seals in the product-contacting area are generally not lubricated. To facilitate assembly (better gliding properties and securing against turning), this type of elastomer seal may, however, be wetted using a food-grade lubricant.

! Wetting elastomer seals is not permitted when they are used in ATEX applications!

10.8 Removing and Installing the "Shrunk-on" Valve Seat Seal

10.8.1 Removing the Shrunk-on Valve Seat Seal

For information on valve seat seals, see Section 3.4, Page 19

Tools required:

- O-ring cutter
- Heat-resistant protective gloves

⚠ Caution!

Health hazard due to toxic fumes!

The O-ring cutter cuts the seal with a hot metal tip. At temperatures of more than 300 °C, toxic fumes can be released.

► Avoid directly inhaling the fumes.

⚠ Caution!

Risk of injury due to hot and sharp-edged parts!

The O-ring cutter cuts the seal with a hot metal tip. This process heats up the seal and possibly also metal parts of the valve.

► When removing the valve seat seal always wear heat-resistant protective gloves.

Carry out the following steps:

1. Place the heated metal tip of the O-ring cutter at right angles on the valve seat seal to be removed.
2. Cut through the valve seat seal at one point using the O-ring cutter.

   ! Pay attention not to damage the edge of the radial groove.



Fig.22: Cut through valve seat seal

3. Take out the cut valve seat seal.

→ The valve seat seal has been removed.

10.8.2 Fitting the Shrunk-on Valve Seat Seal

Tools required:

- Oven (no microwave)
- Heat-resistant protective gloves

Carry out the following steps:

1. Heat the new valve seat seal in the oven.
   - Temperature: 140 °C (guideline value)
   - Time: 3 - 5 minutes (guideline value)

   ! Make sure that the seal can be deformed along the circumference without much effort. The heating time required depends on the type of oven and can vary accordingly.



Fig.23: Oven

2. Use both thumbs to press the heated valve seat seal into the radial groove at one point.

   ! Valve seat seals made of hard sealing materials must not be greased.

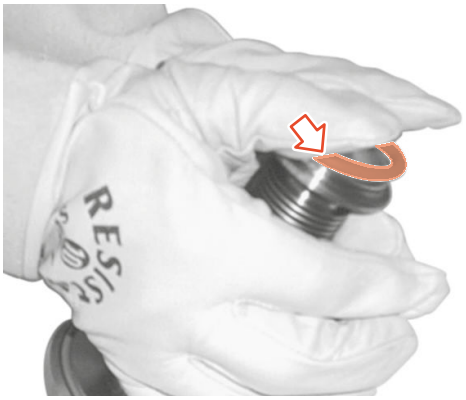

Fig.24: Place the valve seat seal into the groove

3. Then use both thumbs/palms to press the valve seat seal in place in the radial groove.

   ! Make sure the valve seat seal "clicks" into the radial groove. The audible clicking noise indicates that the seal has been fitted correctly.



Fig.25: Mounting the valve seat seal

→ The valve seat seal is still too rigid and cannot be mounted?

– Reheat the valve seat seal as described in the previous instruction step.

→ When mounting the valve seat seal, the seal does not "click" into place any more?

The valve seat seal has been overheated and can no longer be used.

– Repeat the operation with a new valve seat seal.

– Observe the data specified for heating the valve seat seal.

→ The valve seat seal has been fitted.

10.9 Carrying out the "Internal assembly" leak test (bubble test)

Hint!

Observe the inspection interval! The metal bellows must be checked for leaks as part of the annual maintenance using the pressurizing tool.

Notice

Risk of damage to the metal bellow from torsion

The metal bellows are damaged if forces other than that for the valve stroke are applied or transferred.

► If possible, remove any objects that are hazardous for the bellows before working on the valve.
► Always exercise caution and prudence.

Tools required:

- Pressurizing tool
- Compressed air supply
- Shut-off valve Ø 6 mm
- Pressure regulating valve Ø 6 mm

- Water bath

Carry out the following steps:

1. Insert the pressurizing tool into the inner assembly.

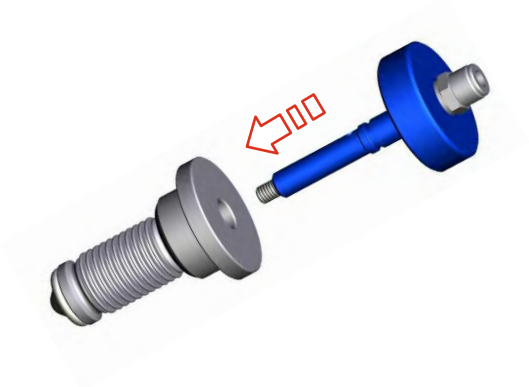

Fig.26: Inserting the pressurizing tool

2. Tightly screw the pressurizing tool to the inner assembly by hand.
   ! With the inner assembly, ideally apply the force to the valve seat.



Fig.27: Screwing the pressurizing tool

3. Apply max. 3 bar of compressed air to the pressurizing tool.
   ! Air pressures > 3 bar can damage the metal bellows.
4. Immerse the internal assembly in a water bath for approx. 30 seconds.
   ! While the internal assembly is immersed, check the internal assembly for leaks. Leakages will be indicated by air bubbles appearing on the surface.

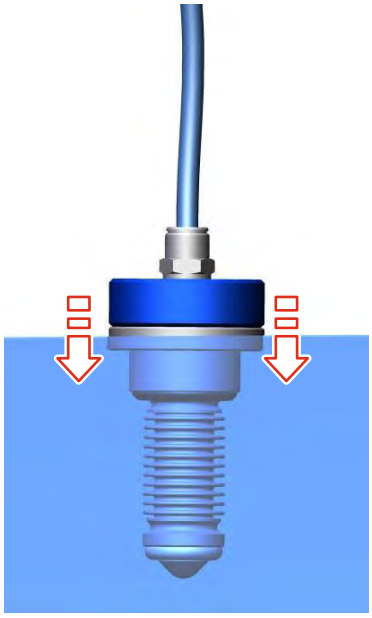

Fig.28: Water bath

5. Remove the internal assembly from the pressurizing tool in reverse order.

→ This completes the leak test.

10.10 Disassembling and assembling actuator PA35 PV

10.10.1 Disassembling actuator PA35 PV

⚠ Caution!

Danger of injury due to spring force being released

You may be injured if the spring tension is released in an uncontrolled manner, causing actuator parts to be moved or thrown around rapidly.

► Load and unload the spring in a controlled and slow manner.
► Wear protective gloves for all work.
► Always exercise caution and prudence.

Tools required:

- Hex socket key
- Assembly tool for PA35

Carry out the following steps:

1. Loosen the hex socket screws from the actuator using the hex socket key.



Fig.29: Loosening the hex socket screws

2. Remove the lock washer from the actuator.



Fig.30: Removing the lock washer

3. Press the actuator cover downwards, remove retaining ring and take the cover off.

   ! Pay attention to the alignment of the cover (asymmetrical design) already when disassembling.

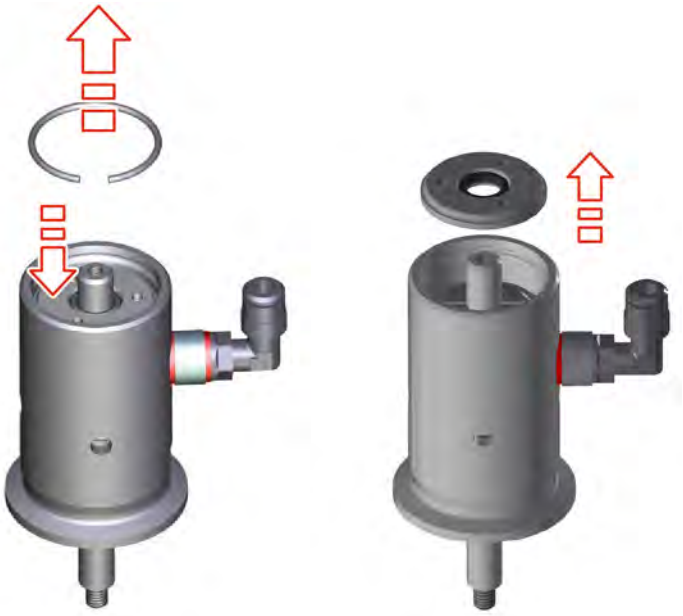

Fig.31: Removing the retaining ring & actuator cover

4. Position actuator in assembly tool holder.

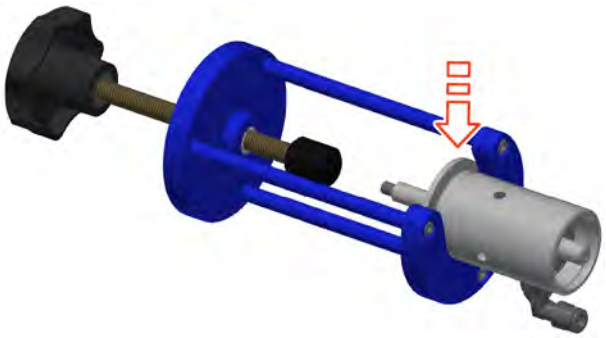

Fig.32: Positioning the actuator

5. Press the piston rod upwards by tightening the assembly tool, pull the retaining ring out of the groove and remove both parts of the retaining ring from the piston rod.



Fig.33: Stripping the actuator components off

6. Slowly release the pressure on the actuator spring and remove the drive from the assembly tool.
7. Carefully pull the actuator cylinder off the actuator components.

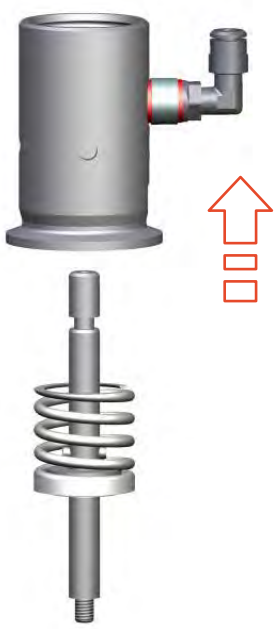

Fig.34: Pulling off the actuator cylinder

8. Carefully pull the actuator components off the piston rod.



Fig.35: Pulling off actuator components

9. Carefully lift the lifting piston out of the cylinder.

   ! Pay attention to the alignment of the piston (asymmetrical design) already when disassembling.



Fig.36: Lifting out the lifting piston

→ Actuator PA35 PV is disassembled.

10.10.2 Assembling actuator PA35 PV

Hint!

Pay attention to the following points when assembling the actuator:

- Replace all visible seals.
- Thoroughly clean and check the interior cylinder contact surfaces, O-ring grooves, piston rod and piston disc.
- When changing the seals, do not damage the seal groove.
- Use only replacement seals from the seal set indicated in the list of spare parts.
- Grease all seals and the associated contact surfaces with the food-grade lubricant PARALIQ GTE 703.

Tools required:

- Hex socket key
- Assembly tool for PA35
- Food-grade lubricant PARALIQ GTE 703

Carry out the following steps:

1. Assemble the actuator in the reverse order of disassembly, see Section 10.10.1, Page 44.

   ! Anti-twist device: when inserting the actuator components into the actuator cylinder, the cross pin of the piston rod must be positioned in the recess inside the cylinder.

   ! After placement of the actuator cover and the retaining ring, tighten the assembly tool again so that the actuator cover is pressed upwards. Then screw the retaining ring hand-tight to the actuator cover using the hex socket screws.

→ Actuator PA35 PV is assembled.

10.11 Disassembling and assembling actuator PA35 PV H

10.11.1 Disassembling actuator PA35 PV H

Tools required:

- Hex socket key
- Assembly tool for PA35

Carry out the following steps:

1. Loosen the countersunk screw from the actuator, remove the screw and washer.



Fig.37: Loosening the countersunk screw

2. Position pneumatic actuator in assembly tool holder.

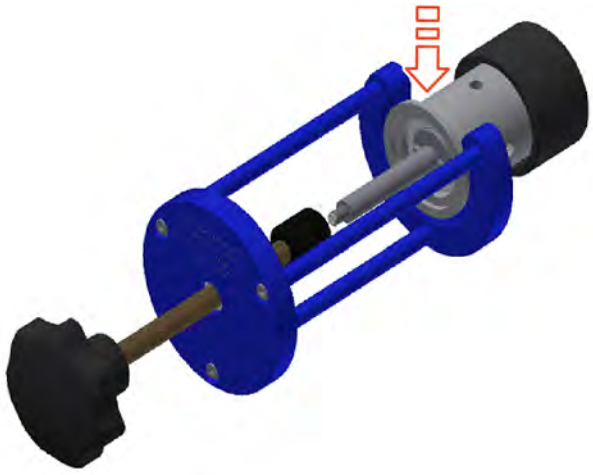

Fig.38: Positioning the pneumatic actuator

3. Compensate actuator spring force by tightening the mounting tool. Then screw the hand wheel off.

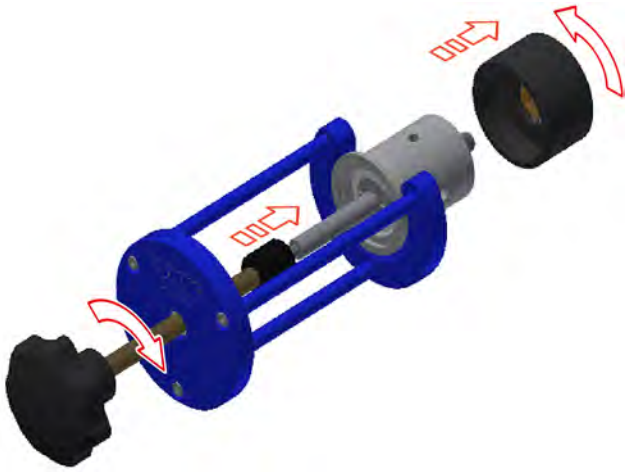

Fig.39: Remove the hand wheel

4. Slowly release the pressure on the actuator spring and remove the drive from the assembly tool.
5. Carefully pull the actuator cylinder off the actuator components.



Fig.40: Pulling off the actuator cylinder

6. Carefully pull the actuator components off the piston rod.



Fig.41: Pulling off actuator components

→ Actuator PA35 PV H is disassembled.

10.11.2 Assembling actuator PA35 PV H

Hint!

Pay attention to the following points when assembling the actuator:

- Replace all visible seals.
- Thoroughly clean and check the interior cylinder contact surfaces, O-ring grooves, piston rod and piston disc.
- When changing the seals, do not damage the seal groove.
- Use only replacement seals from the seal set indicated in the list of spare parts.
- Grease all seals and the associated contact surfaces with the food-grade lubricant PARALIQ GTE 703.

Tools required:

- Hex socket key
- Assembly tool for PA35

Carry out the following steps:

1. Assemble the actuator in the reverse order of disassembly, see Section 10.11.1, Page 49.

! Anti-twist device: when inserting the actuator components into the actuator cylinder, the cross pin of the piston rod must be positioned in the recess inside the cylinder.

! Tighten the countersunk screw to the hand wheel by hand using the hex socket key and make sure that the marker disc is not crushed.

→ Actuator PA35 PV H is assembled.

10.12 Maintenance

Well-planned maintenance is essential to ensure a long service life of the valve. Observe the following maintenance intervals. Prepare maintenance activities well:

- Keep a maintenance log for the valve.
- Use the statistical analyses for your plant to plan maintenance intervals.

Only allow qualified maintenance staff to carry out maintenance work.

Hint!

Prior to any work on the open valve, ensure that it has stopped operation, see Section 10.5, Page 34.

The following information and values are based on the experience of GEA Flow Components and apply for installations working in 2-shift operation.

Activities to be performed once a month	
Component	**Activity to be performed**
Valve	Visual inspection

Activities to be performed after 3 months (only after initial commissioning or after a process change)	
Component	**Activity to be performed**
Product contact seals	Check of mechanical parts and visual inspection of condition
Internal assembly with bellows	Check of mechanical parts and visual inspection of condition Leak test of bellows (bubble test)
Actuator	Function check
Valve	Function check
Feedback	Function check
Pneumatic connections	Check of mechanical parts and visual inspection of condition Leak test
Electrical connections	Visual inspection

Activities to be performed once a year	
Component	**Activity to be performed**
Product contact seals	Seal replacement
Internal assembly with bellows	Check of mechanical parts and visual inspection of condition Leak test of bellows (bubble test)
Actuator	Check of mechanical parts and visual inspection of condition Function check
Valve	Check of mechanical parts and visual inspection of condition Function check
Feedback	Check of mechanical parts and visual inspection of condition Function check
Pneumatic connections	Check of mechanical parts and visual inspection of condition Leak test
Electrical connections	Check of mechanical parts and visual inspection of condition

Activities to be performed every 5 years	
Component	**Activity to be performed**
Actuator	Maintenance including seal replacement

10.13 Checking the Feedback Unit

After completing maintenance work, check the function of the feedback unit and readjust it if necessary.

10.13.1 Setting the Feedback Unit

Carry out the following steps:

1. Set the initiator for detection of the rest position.
2. Actuate the valve with compressed air.

   → For information on air connections see Section 6.4, Page 24.

   If provided, adjust the initiator for the actuated position. For reference regarding the stroke to be expected see the “Valve Stroke“ table Section 10.13.2, Page 55.

→ The feedback unit has been set.

Hint!

If a control top is present, the information provided in the corresponding instruction manual must be observed.

10.13.2 Valve Stroke

Strokes Depending on Size		
Size DN	**Size OD**	**Valve stroke [mm]**
DN 6	--	2
DN 8	--	2
DN 10	OD ½"	2
DN 15	OD ¾"	5

11 Alarms

11.1 Malfunctions and remedies

Notice

Warning of damage to property/loss of product

Ignoring malfunctions may cause considerable damage to property and loss of product. The safe operation of the valve in the event of a fault can no longer be taken for granted and in the worst case can result in a loss of sterility in the process.

► Make sure that malfunctions are quickly identified and promptly fixed.

In the event of malfunctions immediately deactivate the valve and secure it against inadvertent reactivation. Malfunctions may only be remedied by qualified staff, who must observe the safety instructions. For malfunctions not listed in the table below, contact the manufacturer.

Malfunction	Cause	Remedy
Medium is leaking from the clamp.	The housing seal is not fitted correctly or damaged.	Fit the housing seal correctly or replace it if damaged.
During pressure testing of the internal assembly, air escapes from the metal bellows.	The metal bellows on the internal assembly is defective.	Replace the complete internal assembly.
Leak at the valve seat.	• The valve seat seal is defective. • Product deposits on the valve seat.	• Replace the valve seat seal or the PTFE bellows. • Check the housing.
The maximum valve stroke is not reached when the valve is actuated pneumatically.	Leakage in the actuator.	• Check the sealing surfaces in the actuator for damage. • Replace the seals.
Valve feedback not correct.	• The feedback unit is not fitted correctly. • The proximity switch is not in the correct position or is defective. • Fault in the power supply.	• Check that the feedback unit has been fitted correctly. • Check the position of the proximity switch and re-adjust if necessary. • Check the wiring.

12 Decommissioning

12.1 Safety instructions

For shutting down, the following principles apply:

- Switch off the compressed air.
- Switch off the component with the main switch.
- Padlock the main switch (if fitted) in the off position to prevent it from being switched back on. The key to the padlock must be deposited with the person responsible until the machine is restarted.
- For longer periods of standstill, observe the storage conditions, see Chapter 4, Page 20.

12.2 Disposal

12.2.1 General notes

Dispose of the component in an environmentally safe manner. Observe the statutory waste disposal regulations applicable at the place of installation.

The component consists of the following materials:

- Metals
- Synthetic materials
- Electronic parts
- Lubricants containing oil and grease

Separate the different materials and dispose of them correctly sorted. Also observe the instructions regarding disposal in the operating instructions for the individual components.

13 Appendix

13.1 Lists

13.1.1 Abbreviations and terms

Abbreviation	Explanation
°	Symbol for the grade of a scale [degrees] All degree data is assumed to be angle degrees unless explicitly specified otherwise.
°C	Unit of measurement of temperature [degree Celsius]
°F	Unit of measurement of temperature [degree Fahrenheit]
AISI	American Iron and Steel Institute; material designation
ATEX	Atmosphères Explosibles Directive of the European Union on explosion protections
AZ	Venting cylinder
bar	Unit of measurement of pressure [bar] All pressure data is assumed to be gauge pressure [barg] unless explicitly specified otherwise.
CFR	Code of Federal Regulations; collection of US federal regulations
d	Short name for diameter
DIN	German standard issued by DIN (Deutsches Institut für Normung e.V., German Institute for Standardisation)
dm^3_N	Unit of measurement of volume [cubic decimetre under standard conditions]
DN	DIN nominal width
EN	European Standard
EPDM	Ethylene Propylene Diene Rubber Material designation, short designation according to DIN/ISO 1629
FDA	U.S. Food and Drug Administration Food monitoring and drug administration in the USA
H_2O_2	Hydrogen peroxide; chemical formula
ISO	International standard issued by the International Organisation for Standardisation
m/s	Unit of measurement of speed/velocity [metres per second]
min.	Unit of measurement of time [minute]
mm	Unit of measurement of length [millimetre]
µm	Unit of measurement of length [micrometre]
NC	Normally Closed; direction of action spring-closing/air-opening

Abbreviation	Explanation
Nm	Unit of measurement of work [newton metre] Unit of torque 1 Nm = 0.737 lbft Pound-Force (lb) + Feet (ft)
NO	Normally Open; direction of action air-closing/spring-opening
OD	Outside diameter; short name for outside diameter for inch tubes according to DIN 11866-C
PA	Pneumatic actuator
PTFE	Polytetrafluoroethylene Material designation, short designation according to DIN/ISO 1629
SW	Width across flats; indicates the size of spanners
T.VIS	Tuchenhagen Valve Information System
TIG	Tungsten inert gas welding

engineering for
a better world

We live our values.

Excellence · Passion · Integrity · Responsibility · GEA-versity

GEA Group is a global engineering company with multi-billion euro sales and operations in more than 50 countries. Founded in 1881, the company is one of the largest providers of innovative equipment and process technology. GEA Group is listed in the STOXX® Europe 600 Index.

GEA Switzerland

GEA Aseptomag AG
Industrie Neuhof 28
CH-3422 Kirchberg

Tel +41 (0)34 426 29 29
Fax +41 (0)34 426 29 28

service.aseptomag@gea.com
gea.com