OPERATING INSTRUCTIONS

Translation of the original instructions



GEA Hilge SIPLA BLOC

Hygienic pumps

GEA Hilge
Dokumentnummer: BA.06X.BYY.001
Version: 001 / Sprache: EN-GB / Datum: 18.06.2026

Copyright © GEA Hilge, subsidiary of GEA Tuchenhagen GmbH2025. All rights reserved. No liability will be accepted for damage resulting from non-observance of this document. If you have any questions or require clarification concerning the use of this document, contact *Customer service*.

Table of Contents

1 General 6
1.1 Information about the document 6
1.1.1 Purpose and structure of the document 6
1.1.2 Design elements 6
1.1.3 Reading obligation and storage 7
1.1.4 Respective documents 7
1.2 Manufacturer address 7
1.3 Customer service 7
1.4 Declarations of conformity 8

2 Safety 10
2.1 Intended use 10
2.1.1 Pumped fluids 10
2.1.2 Connections and pipelines 10
2.1.3 Types 10
2.1.4 Starting frequency 10
2.2 Modification 10
2.3 Structure of warning notices 11
2.3.1 Preceding warning notices 11
2.3.2 Integrated warning notices 11
2.3.3 Signal words 11
2.4 Personnel qualification 12
2.5 General safety instructions 12
2.5.1 General hazard 12
2.5.2 Mechanical hazard 13
2.5.3 Electrical hazard 13
2.5.4 Thermal hazard 14
2.5.5 Hazard caused by noise 14
2.5.6 Hazard through vibration 14
2.5.7 Radiation hazard 14
2.5.8 Hazard due to operating environment 15
2.5.9 Ergonomic hazard 15
2.5.10 Hazard through hazardous substances 15
2.6 Personal protective equipment 15
2.7 Safety devices 16
2.8 Residual dangers 16
2.9 Safety signs 16
2.10 Emergency measures 17

Copyright @ GEA Hilge
2026 - All rights reserved

3 Description 18
3.1 Structure and function 18
3.1.1 Component overview 18
3.1.2 Structure and quality 18
3.1.2.1 Areas of application 19
3.1.2.2 Hygienic design applications 19
3.1.2.3 Pump denomination 19
3.2 Signs 20
3.3 Technical data 20
3.3.1 Type plate 20
3.3.2 Weights 21
3.3.3 Torques 21
3.3.4 Serial number 22
3.3.5 Performance specifications 22
3.3.6 Noise emissions 22
3.3.7 Operating temperatures 22
3.3.7.1 Maximum media temperatures 22
3.3.7.2 Permissible ambient temperatures 22
3.3.8 Maximum operating pressure 23
3.3.9 SIPLA gap sizes 23
3.3.10 Resistance of Sealing Materials 24
3.3.11 Minimum flow rate 25

4 Storage and transport 26
4.1 Storage 26
4.2 Transport aids 26
4.3 Transport 26

5 Assembly and installation 28
5.1 Requirements on the place of use 28
5.1.1 Reducing noises and vibration 30
5.2 Assembly preparations 32
5.3 Set-up, assembly, connection 33
5.3.1 Installation in the piping system 34
5.3.2 Mechanical seal 34
5.3.3 Connecting the pump to the power supply 35
5.3.3.1 Operator-side pre-requisites equipotential bonding 35
5.3.3.2 Connecting frequency inverter 37

Copyright @ GEA Hilge
2026 - All rights reserved

6 Commissioning 39
6.1 Preparing commissioning 39
6.2 Operating conditions 39
6.3 Initial start-up 40
6.4 Restarting 41
6.5 Monitoring operation 41
6.6 Shutdown 41

7 Cleaning 42
7.1 General 42
7.2 CIP cleaning 42
7.3 SIP cleaning 43
7.4 Cleaning at standstill 44

8 Maintenance 45
8.1 Maintenance and inspection 45
8.1.1 Maintenance schedule 46
8.1.2 Maintenance jobs 47
8.2 Dismantling 48
8.3 Assembly 49
8.3.1 Installation instructions 53
8.3.2 Installing pump casing 54
8.3.3 Installing single mechanical seal 57
8.3.4 Installing the single encapsulated mechanical seal 58
8.3.5 Installing the impeller and back plate 59

9 Malfunctions 63
9.1 Faults and remedies 63

10 Decommissioning, dismantling and disposal 66
10.1 Decommissioning 66
10.2 Dismantling 66
10.3 Disposal 67

11 Annex 68
11.1 Clearance certificate 68
11.2 Abbreviations and terms 69

Copyright @ GEA Hilge
2026 - All rights reserved

1 General

This chapter contains basic instructions on the use of this document and explanations of typographical conventions. In addition, this chapter contains details on the version and structure.

In this document, the term pump refers to GEA Hilge SIPLA BLOC.

1.1 Information about the document

1.1.1 Purpose and structure of the document

The purpose of this Operating Manual is to convey information on operation of the pump. It is divided into several chapters for this purpose. This structure is oriented towards the various life phases of the pump. When the contents are observed, the service life and reliability of the pump increased and the risk of personal injuries and property damage are reduced. In addition, the Operating Manual is applicable for the operator as a basis for compiling instruction manuals.

1.1.2 Design elements

In this document, the following design elements are used as orientation aids.

General orientation aids

- Figure numbers
- Table numbers
- Chapter numbers
- Page numbers
- Headers and footers
- References
- Lists

Lists

Bullet points are shown in lists and do not prescribe a specific sequence.

- Bullet point
- Bullet point
  - Sub-point
  - Sub-point
- Bullet point

Numbered lists

In a sequence of actions, the order of the action steps is specified by a numbered list. Partial results and the result of a sequence of actions are marked by arrows.

1. Action step one
2. Action step two
   2.1 First sub-step two
   2.2 Second sub-step two
   → Partial result
3. Action step three
   → Partial result
4. Action step four

⇒ Outcome

Copyright @ GEA Hilge
2026 - All rights reserved

INFO

Informational texts contain additional information about a description or action step.

1.1.3 Reading obligation and storage

This document must be read by every person who carries out actions at the pump and must be available for these persons at all times.

1.1.4 Respective documents

In this Operating Manual, reference is made to the documents listed below.

GEA documents

- Pump data sheet
- ATEX supplementary operating manual for pumps approved for use in potentially explosive atmospheres.

External documents (where applicable)

- Operating manual for mounted components, such as motor, coupling, discharge valve, flushing container

The documents named are not part of this Operating Manual. Documents which are not available can be requested from GEA Hilge.

1.2 Manufacturer address

GEA Hilge, subsidiary of GEA Tuchenhagen GmbH

Hilgestrasse 37-47

Germany

55294 Bodenheim

1.3 Customer service

Phone: +49 (0) 6135 7016-0

Fax: +49 (0) 6135 759 55

Spare parts: spareparts.hilge@gea.com

Technical Service: hilge.technicalservice@gea.com

www.gea.com

Copyright @ GEA Hilge
2026 - All rights reserved

1.4 Declarations of conformity

EC Declaration of Conformity for machines in accordance with the EC Machinery Directive 2006/42/EC, Annex II 1. A

The following declaration does not contain serial numbers or signatures. The original declaration is delivered with the pump.

Manufacturer:	GEA HILGE Subsidiary of GEA Tuchenhagen GmbH Hilgestrasse 37-47 55294 Bodenheim, Germany
We declare under our sole responsibility that the machine	
Model:	
Type:	
Serial number	
conforms with all the relevant provisions of this directive and the following directives:	
Relevant EC directives:	2006/42/EC – EC Machinery Directive
Applicable harmonized standards, in particular:	EN 809:1998/A1+AC(D) EN ISO 12100:2010
Remarks:	We also declare that the relevant technical documentation for this machine has been prepared in accordance with Annex VII, Part A, and agree to submit the documentation on justified request of national authorities on a data carrier.
Person authorised for compilation and handover of technical documentation:	GEA HILGE Subsidiary of GEA Tuchenhagen GmbH Hilgestrasse 37-47 55294 Bodenheim, Germany
Bodenheim, ... Signature Managing Director	 Signature Manager Product Development
Original declaration: CO.099.YYY.017DEGB_R1	

Copyright @ GEA Hilge
2026 - All rights reserved

UKCA Declaration of Conformity

The following declaration does not contain serial numbers or signatures. The original declaration is delivered with the pump.

We,	GEA HILGE Subsidiary of GEA Tuchenhagen GmbH Hilgestrasse 37-47 55294 Bodenheim, Germany
hereby declare that the machine	
Model:	
Type:	
Serial number	
complies with the following UK directives, provided that the conditions for start-up are fulfilled as specified in the technical documentation, in particular in the operating manual: Supply of Machinery (Safety) Regulations 2008, 2008 No. 1597	
Applicable harmonized standards:	EN 809:1998/A1+AC(D) EN ISO 12100:2010
Person authorised for compilation and handover of technical documentation:	GEA Mechanical Equipment UK Ltd Westfalia House Old Wolverton Road, Old Wolverton, Milton Keynes MK12 5PY, United Kingdom
Bodenheim, ... Signature Managing Director	 Signature Manager Product Development
Original declaration: CO.099.YYY.018GB_R1	

Copyright @ GEA Hilge
2026 - All rights reserved

2 Safety

This chapter describes the minimum requirements for intended use of the pump. It forms the basis for safe operation of the pump.

2.1 Intended use

The pump has been specially designed.

- Pump only media that are specified on the pump data sheet.
- Operate the pump only in the electrical grid that was specified on the pump data sheet.

2.1.1 Pumped fluids

Use only clean or lightly polluted liquids as pumped fluids as long as they do not chemically or mechanically attack the pump materials or reduce their strength. If you want to pump liquids with higher viscosity than that of water, check for possible overload of the motor.

2.1.2 Connections and pipelines

The pipe nominal diameters of the system should be equal to or greater than the pump nominal diameters DNE (suction side) or DNA (pressure side), and the fittings to the pump should match exactly the type standard of the fixed mating connection part on the pump. The suction line must be hermetically sealed and routed such that no air pockets can form. Avoid tight bends and valves directly in front of the pump. On the suction side, a straight settling section with a minimum length of 5 times the pipe diameter should be provided. The suction head of the system must not be larger than the suction head guaranteed by the pump.

2.1.3 Types

All information and descriptions in this operating manual on the use and handling of the pump refer exclusively to the standard versions. Special designs and customised deviations as well as random external influences in the use and operation are not included in these instructions.

2.1.4 Starting frequency

The switching frequency of pumps describes the number of times electric motors are started up per hour. Frequent switching increases wear and reduces the life span of the mechanical seal, so 15 switch-on processes per hour should not be exceeded.



Starting frequency

Do not exceed the switching frequency of the motor used. Observe the motor operating manual for details of starting frequency.

2.2 Modification

Modification or alteration of the pump is only permitted with the written permission of GEA Hilge. Modifications can endanger the operating safety and lead to personal injuries and property damage. Exclusive use of original spare parts and accessories authorised by GEA Hilge ensures safety. The manufacturer will bear no liability for consequences arising from the use of unauthorised parts.

Copyright @ GEA Hilge
2026 - All rights reserved

2.3 Structure of warning notices

Warning notices warn of hazards that may exist when performing certain actions. In this document, the following warning notices are used. The extent of the hazards is categorized into risk levels and can be recognized by the corresponding signal words.

2.3.1 Preceding warning notices

Preceding warning notices are used when there is a hazard during a sequence of actions. Warning notices are colour-highlighted and supplemented by a pictogram in the event of possible personal injury.

⚠SIGNAL WORD



Nature and source of the hazard
Consequence of disregarding the warning.

- Measure to avoid or escape the danger.

Figure 2-1 - Structure of a preceding warning notice

2.3.2 Integrated warning notices

Integrated warning notices are used when there is a hazard involved in a single action step.

1. **SIGNAL WORD** Nature and source of the hazard
   Consequence of disregarding the warning.
   - Measure to avoid or escape the danger.

Figure 2-2 - Structure of an integrated warning notice

2.3.3 Signal words

ATTENTION

The signal word ATTENTION indicates a hazard that could result in property damage if not avoided.

CAUTION

The signal word CAUTION indicates a hazard with a low risk level which could result in light to medium injuries if not avoided.

WARNING

The signal word WARNING indicates a hazard with a medium risk level which could result in death or severe injury if not avoided.

DANGER

The signal word DANGER indicates a hazard with a high risk level which will result in death or serious injury if not avoided.

Copyright @ GEA Hilge
2026 - All rights reserved

2.4 Personnel qualification

The basic pre-requisites listed below must always be fulfilled for all actions on the pump.

- This Operating Manual has been read and understood.
- Safety-related tasks in the vicinity of the pump are regulated and assigned.
  - Maintaining order
  - Compliance with safety requirements
  - Securing of danger areas

The groups of people named below must also have the personnel qualifications or skills listed below and be authorised for actions at the pump by the operator.

operating staff

- Instructed by the operator, a trained customer specialist or a GEA service specialist

customer specialist

- Technical training

trained customer specialist

- Technical training in a specific specialist area
- Training by GEA personnel or participation in training at GEA Hilge

GEA service specialist

- Personnel from GEA Hilge, see *1.3 Customer service*

Where necessary, reference is made to the respective group of people in this Operating Manual.

2.5 General safety instructions

The pump has been built according to state-of-the-art and the recognised safety regulations valid at the time it is put into circulation. Nevertheless, the measures stipulated by the operator and listed below must be kept in order to maintain safety.

The hazards listed in this section can cause property damage and personal injuries of different intensities.

2.5.1 General hazard

Source	Consequences	Measures
Machine not in proper condition	Personal injuries and property damage	Check proper condition of the pump.
Non-observance of this Operating Manual	Personal injuries and property damage	Read this Operating Manual completely and understand it.
Operating media	Personal injuries	• Wear personal protective equipment. • Avoid contact with operating media.

Copyright @ GEA Hilge
2026 - All rights reserved

2.5.2 Mechanical hazard

Source	Consequences	Measures
Moving or rotating components	• Being drawn in or caught • Entrapment • Crushing • Impact	• Remove jewellery. • Tie hair back or wear a hair net. • Wear tight-fitting clothing.
• Sharp edges • Cutting parts • Pointed parts	• Cutting or shearing • Penetration or puncture • Shearing • Rubbing or grazing	• Wear personal protective gear. • Use transport protection and available jigs.
• Rough or slippery surfaces • Stumbling hazards	• Slipping • Stumbling • Falling	• Wear personal protective gear. • Eliminate leaked liquids and stumbling hazards.
• Gravity • Falling objects	• Impact • Crushing	• Do not walk under suspended loads. • Eliminate the stumbling hazards. • Only move mobile pumps on level surfaces. • Secure mobile pumps against rolling away. Actuate the parking brake (where applicable).
Height above the ground	Falling	Use supports and permitted climbing aids.

2.5.3 Electrical hazard

Source	Consequences	Measures
Electromagnetic processes	Implications for electronic medical implants	People with medical implants must keep their distance.
Electrostatic processes	• Electric shock • Fire • Chemical reaction	• Avoid contact to components. • Check the voltage of components. • Wear personal protective gear. • Eliminate leaked flammable substances.

Copyright @ GEA Hilge
2026 - All rights reserved

2.5.4 Thermal hazard

Source	Consequences	Measures
Objects or materials at high or low temperature	• Freezing • Burns • Scalding	• Wear personal protective gear. • Wait for adjustment to room temperature.
Radiation from heat sources	• Burns • Discomfort	• Wear personal protective gear. • Keep time spent to a minimum.

2.5.5 Hazard caused by noise

Source	Consequences	Measures
Manufacturing process or production process	• Permanent hearing loss • Tinnitus (ringing in the ears) • Dizziness • Discomfort • Loss of consciousness • Fatigue • Stress	• Keep time spent at a minimum. • Wear personal protective gear.

2.5.6 Hazard through vibration

Source	Consequences	Measures
• Moving equipment • Cavitation processes • Frictional surfaces • Vibratory equipment	Discomfort	Keep time spent at a minimum.

2.5.7 Radiation hazard

Source	Consequences	Measures
• Optical radiation • Laser beams	• Eye damage • Skin damage	• Wear personal protective gear. • Avoid looking at the source of radiation.

Copyright @ GEA Hilge
2026 - All rights reserved

2.5.8 Hazard due to operating environment

Source	Consequences	Measures
• Lightning strike • Electromagnetic interference • Moisture • Oxygen deficiency • Snow • Dust and fog • Temperature • Contamination • Water • Wind	Personal injury and property damage	• Observe permissible operating conditions, see chapter *5.1 Requirements on the place of use*.

2.5.9 Ergonomic hazard

Source	Consequences	Measures
• Flickering • Orifice plates • Shadow formation • Stroboscopic effects	Discomfort	• Avoid looking into the source. • Keep time spent at a minimum.

2.5.10 Hazard through hazardous substances

Source	Consequences	Measures
• Dangerous media • Operating media • Cleaning agents	• Caustic and irritant effect on eyes, skin and the respiratory system • Material damage to surfaces and seals	• Wear personal protective equipment. • Observe the product data sheet and manufacturer information. • Conduct leakages away in such a way that they do not present a hazard.
• Decontamination • Contamination	• Poisoning • Infections	• Make sure there are no objects in the pump. • Clean the pump before initial start-up and after all assembly work. • Carry out CIP and SIP cleaning cycle.

2.6 Personal protective equipment

To prevent possible personal injuries, the personal protection equipment must be worn.

In addition, GEA recommends keeping the requirements listed below.
- Locally applicable accident prevention regulations
- Instruction manual from the operator or employer

Copyright @ GEA Hilge
2026 - All rights reserved

2.7 Safety devices

Safety devices monitor operating parameters. To protect the pump, measures are initiated automatically if the specified tolerance values are exceeded.

If one of the safety devices triggers stopping of the pump, the pump may only be restarted after the cause has been determined and eliminated.

There are no safety devices installed on this pump.

2.8 Residual dangers

Despite all the measures taken, the following residual hazards can lead to personal injuries and property damage at any time.

- Improper use
- Material fatigue
- Failure of safety devices

2.9 Safety signs

The following safety signs are used in these Operating Manual or are attached to the pump.

The position of the safety signs used on the pump is shown on an overview diagram, see *3.2 Signs*.

Signs giving orders



Observe manual

Hazard if this Operating Manual is not read before actions at the pump.

Warning signs



General warning sign

Hazard for persons, conveyed by the additional sign.



Beware of electric voltage

Hazard due to contact with electric voltage.



Beware of hot surface

Hazard due to contact with hot surface.

Copyright @ GEA Hilge
2026 - All rights reserved

2.10 Emergency measures

If an emergency occurs at the pump, the company regulations must be followed and the measures listed below must be taken.

Fire

- Call local experts
- Use extinguishing equipment according to company regulations
- Leave the danger area
- Warn endangered persons

Personal injuries

- Do first aid
- Call local emergency services

Copyright @ GEA Hilge
2026 - All rights reserved

3 Description

This chapter contains descriptions of the set-up and function of the pump.

3.1 Structure and function

3.1.1 Component overview

SIPLA BLOC

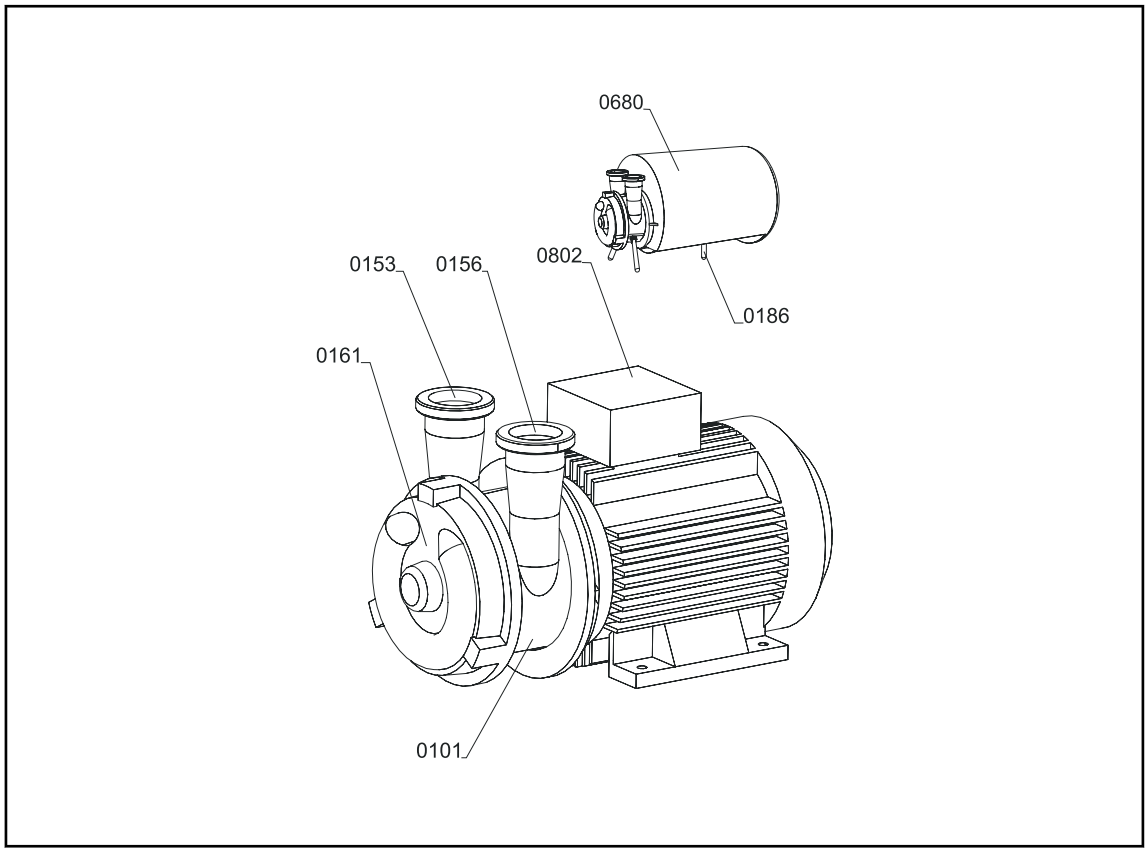

Figure 3-1 - Pump overview SIPLA BLOC

SIPLA BLOC main components

Part no.	Designation
0101	Pump casing
0153	Suction port
0156	Discharge port
0161	Back plate
0186	Combi foot
0680	Shroud
0802	Close coupled motor

3.1.2 Structure and quality

The SIPLA is a self-priming, single-stage side channel pump in ADAPTA and BLOC design. All wetted parts have been designed in accordance with hygiene criteria.

Copyright @ GEA Hilge
2026 - All rights reserved

3.1.2.1 Areas of application

The standard design of the pumps is used in the following areas:

- Industrial applications
- Breweries (beer, wort, mash, yeast, etc.)
- Dairies (milk, milk mixes, cheese production, etc.)
- Soft drinks (fruit juice, lemonade, mineral water, etc.)
- Wine and sparkling wine production
- Distilleries (mash, distillates, etc.)
- Food production (marinades, pickle, cooking oil, etc.)
- Cleaning systems (CIP)
- Cosmetic industry

3.1.2.2 Hygienic design applications

Due to the consistent hygienic design and the use of pore and porosity-free materials, the pump is ideally suited for use in the following areas:

- Pharmaceutical industry
- Medical technology
- In biotechnology process plants

Special applications arise in the area of cure water pumping / WFI, as well as in equipment for the production of parenterals and infusion solutions according to FDA.

Pumps for hygienic design applications

Pumps used for hygienic applications must have certain equipment features and are configured accordingly when ordered. Execute connections in accordance wit the “EHEDG White Paper on GFSI Hygienic Design Scope”.

3.1.2.3 Pump denomination

GEA Hilge pump denomination

GEA Hilge SI-PLA	**6.1**	**BLOC**	**40/40**	**3**	**4**
Pump name	Size	Design type	Nominal diam-eter	Output [kW]	Number of poles

Copyright @ GEA Hilge
2026 - All rights reserved

3.2 Signs

Overview and layout

All safety signs and labels must meet the following criteria during the entire life span of the pump:

- Complete
- Attached as illustrated
- Clean and legible

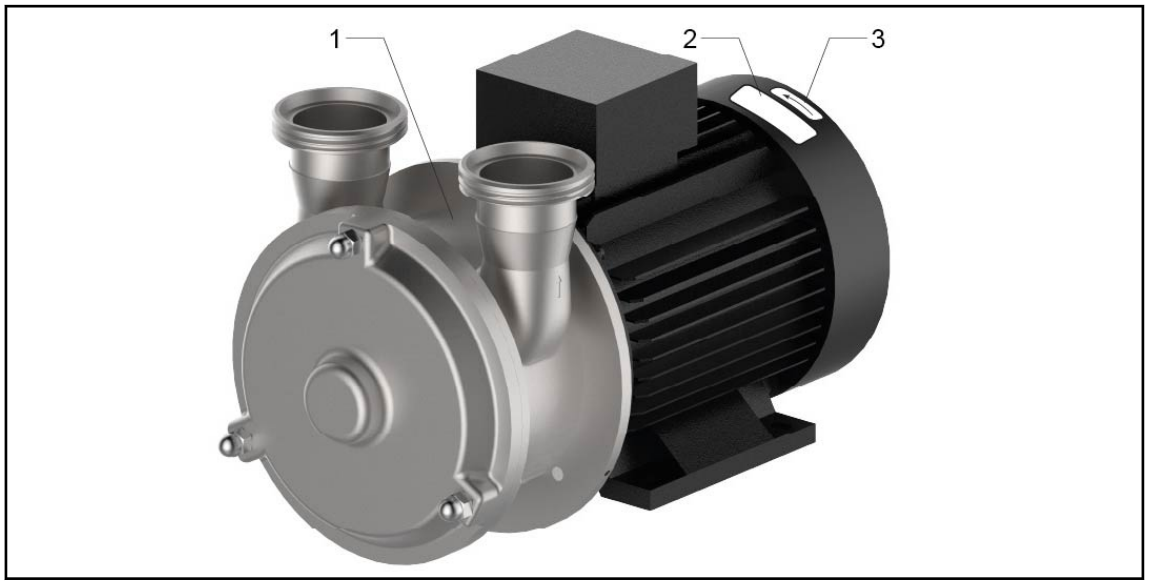

Figure 3-2 - Overview diagram of the signs on the pump

Position	Description	Position	Description
1	Nameplate	2	Caution dry running
3	Rotation arrow		

The representation and meaning of the safety signs used are listed in an overview according to their category, see section *2.9 Safety signs*

3.3 Technical data

3.3.1 Type plate

Each pump carries a nameplate. For information on the exact position, see chapter*3.2 Signs*.

The nameplate contains the following information:

- Manufacturer name and address
- Product safety mark
- Type: Pump denomination
- Model: Pump code
- Ser.no: serial number
- Q: flow rate
- H: head
- P: Motor rating
- n: speed
- YOM: year of manufacture
- TAG/Mat.: Customer name

Copyright @ GEA Hilge
2026 - All rights reserved

3.3.2 Weights

The weights may differ from the ones shown here depending on the version and accessories. Please contact the manufacturer for accurate information and quote the pump / order number.

Design features of the standard pumps described:

- SIPLA Bloc-SUPER, combi foot set-up
- Single mechanical seal
- Shroud hood (SUPER version)
- SIEMENS motor

Weights SIPLA BLOC

Size	Nominal diameter	Motor power [kW]	Weight [kg]
6.1	40/40	1.5	45
6.1	40/40	2.2	47
12.1	40/40	1.5	46
12.1	40/40	2.2	47
18.1	50/50	3	53
18.1	50/50	4	58
18.1	50/50	5.5	66
28.1	65/65	4	70
28.1	65/65	5.5	72
28.1	65/65	7.5	81
52.1	65/65	7.5	98
52.1	65/65	11	119
65.1	80/80	11	130
65.1	80/80	15	140
65.1	80/80	18.5	166
90.1	80/80	22	190

3.3.3 Torques

Element	Part number	Assembly location	Thread / torque
Impeller nut	0922.00	Impeller	SIPLA 3.1 / 20 Nm SIPLA 6.1 - 52.1 / 100 Nm SIPLA 65.1 / 120 Nm
Domed nut	0927.00	Housing	SIPLA 3.1 / 17 Nm SIPLA 6.1 - 90.1 / 62 Nm

Copyright @ GEA Hilge
2026 - All rights reserved

3.3.4 Serial number

The pump can be uniquely identified by the serial number. When ordering spare parts, always quote the serial number. The serial number is indicated on the nameplate.

3.3.5 Performance specifications

The performance data - delivery head and flow rate - are explained in accordance with ISO 9906:2012-03, Grade 2B and documented with the acceptance record.

3.3.6 Noise emissions

Measured values in accordance with DIN EN ISO 3746 for pump units, measuring uncertainty 3 dB(A).

Pump type	Sound pressure level L_{pA} [dB (A)]	Sound power level L_{pA} [dB (A)]
GEA Hilge Sipla 3.1	70	--
GEA Hilge Sipla 6.1	70	--
GEA Hilge Sipla 12.1	75	--
GEA Hilge Sipla 18.1	81	92
GEA Hilge Sipla 28.1	81	92
GEA Hilge Sipla 52.1	83	95
GEA Hilge Sipla 65.1	84	96
GEA Hilge Sipla 90.1	85	97

The noise emissions caused by a pump are influenced mainly by its application. The values shown here should therefore be considered merely as a guide.

3.3.7 Operating temperatures

3.3.7.1 Maximum media temperatures

Design	Temp. [°C]
Normal version	95
Sterilisation (SIP)	140

Further temperatures on request.

3.3.7.2 Permissible ambient temperatures

Minimum temperature	Maximum temperature
0 °C	40 °C

Copyright @ GEA Hilge
2026 - All rights reserved

3.3.8 Maximum operating pressure

The pump’s maximum operating pressure pump depends on various factors:

- Pump type
- Type of connections
- Type of mechanical seal

Operate the pump according to the ordering data.

3.3.9 SIPLA gap sizes

Gap sizes and clearances

Pump type	Pump casing - impeller	Impeller - back plate
3.1	0.15 - 0.20 mm	0.15 - 0.20 mm
6.1	0.15 - 0.20 mm	0.20 - 0.25 mm
12.1	0.15 - 0.20 mm	0.20 - 0.25 mm
18.1	0.30 - 0.35 mm	0.30 - 0.35 mm
28.1	0.30 - 0.35 mm	0.40 - 0.45 mm
52.1	0.35 - 0.40 mm	0.40 - 0.45 mm
65.1	0.50 - 0.55 mm	0.50 - 0.55 mm
90.1	0.45 - 0.50 mm	0.50 - 0.55 mm

Copyright @ GEA Hilge
2026 - All rights reserved

3.3.10 Resistance of Sealing Materials

The resistance and permitted operating temperature of the sealing materials depend on the type and temperature of the medium conveyed. The exposure time can adversely affect the service life of the seals. The sealing materials comply with the regulations of FDA 21 CFR 177.2600 or FDA 21 CFR 177.1550.

The maximum operating temperature is determined by the type of seal and its mechanical load. GEA Hilge recommends users carrying out resistance tests themselves in order to check the suitability of the elastomer selected for their application. Resistance of the sealing materials depend on operating conditions such as length of contact with the medium, process temperature, flow speed, concentration of the cleaning agent and ambient conditions. These can only be determined by the user. If necessary, GEA Hilge can support you with further information for special applications.

Resistance[1]:

- + = good resistance
- o = reduced resistance
- - = no resistance

Sealing material, general operation temperature

Medium	Temperature	EPDM -40...+135 °C (-40...275 °F)	FKM -10...+200 °C (+14...+392 °F)
Caustics up to 3%	up to 80 °C (176 °F)	+	o
Caustics up to 5%	up to 40 °C (104 °F)	+	o
Caustics up to 5%	up to 80 °C (176 °F)	+	–
Caustics at more than 5%		o	–
Inorganic acids up to 3%	up to 80 °C (176 °F)	+	+
Inorganic acids up to 5%	up to 80 °C (176 °F)	o	+
Inorganic acids up to 5%	up to 100 °C (212 °F)	–	+
Water	up to 80 °C (176 °F)	+	+
Steam	up to 135 °C (275 °F)	+	o
Steam, approx. 30 min	up to 150 °C (302 °F)	+	o
Fuels/hydrocarbons		–	+
Product with a fat content of max. 35%		+	+
Product with a fat content of more than 35%		–	+
Oils		–	+

1) depending on the installation situation

Copyright @ GEA Hilge
2026 - All rights reserved

3.3.11 Minimum flow rate

The pump may not be operated below of a flow rate of Q_{min} = 10-15 % Q_{opt}.

For pumps used in explosive atmospheres according to EU explosion protection directive 2014/34/EU, the minimum flow rates of the ATEX additional operating manual in Annex B apply.

Copyright @ GEA Hilge
2026 - All rights reserved

4 Storage and transport

This chapter contains information for the transport of the pump with and without packaging material. In addition, this chapter describes the minimum requirements for storage after delivery as well as for possible intermediate storage. The target group for this chapter are all those who perform actions related to the transport or storage of the pump.

INFO For all transport, observe chapter *2 Safety* of this document.

4.1 Storage

Seal inlet and outlet side with a plastic cover.

Protect seals against dust and damage.

Store the pump under the following conditions:

- Do not store outdoors.
- Store dry and dust-free.
- Do not expose to aggressive media.
- Protect against sunlight.
- Protect against frost.
- Protect against rodents.
- Avoid mechanical vibrations.
- Turn the pump shaft (by approx. 30°) once every month.
- If stored for longer than three months: check the general condition of all parts and package regularly.

INFO After a storage period of more than three years: contact GEA Hilge to have the pump repaired again.

4.2 Transport aids

If the weight of the pump exceeds 40 kg, transport may only be by crane or forklift truck.

4.3 Transport

Transporting the pump with packaging

Prerequisites

- The packaging is undamaged.
- The pump is in a box on a pallet that can be driven underneath.

Tools

- Forklift truck

1. Drive the load handling equipment under the pallet and pick it up. Make sure it is aligned correctly.
2. Transport the pump to its designated destination.

⇒ The pump has been transported to its destination with packaging.

Copyright @ GEA Hilge
2026 - All rights reserved

Unpacking the pump

Prerequisites

- The pump is in a box on a wooden pallet.
- The packaging is undamaged.

Tools

- Scissors or knife
- Gloves
- Strap, load lifting equipment with sufficient load-bearing capacity.
- Crane or forklift truck

1. **CAUTION** Injury due to packaging straps with sharp edges.
   Careless handling of packaging straps can lead to cuts.
   - Wear gloves.

   Cut the packaging straps open and remove them.
2. Lift the box over the pump.
3. Remove fastening material on the pump.

⇒ The pump has been unpacked and can be transported to its place of use.

Transporting the pump without packaging

Prerequisites

- The shroud (if appropriate) has been removed.

Tools

- Strap, load lifting equipment with sufficient load-bearing capacity
- Forklift truck or crane

1. **ATTENTION** Danger due to unsuitable anchor points.
   Forces acting on the pump can damage it.
   - Never fasten a strap to the pump casing or the suction/discharge port!

   Attach the strap to suitable anchor points.

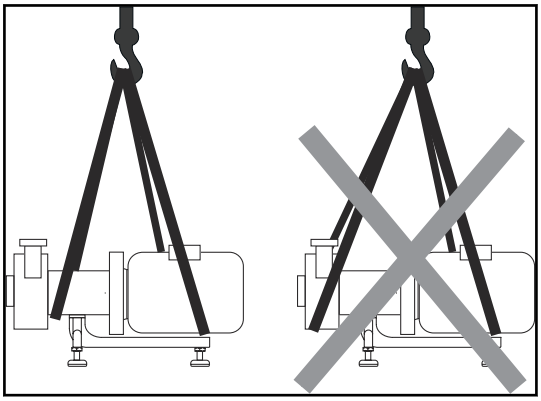

Figure 4-1 - Correct attachment of the straps

2. Align the pump horizontally during lifting.
3. Lift the pump by crane or forklift truck and transport it to the place of use.

⇒ The pump is ready for installation in the system.

Copyright @ GEA Hilge
2026 - All rights reserved

5 Assembly and installation

This chapter contains information and instructions for the assembly and installation of the pump. The target group for this chapter are all those who carry out actions at the pump in this context.

INFO During assembly and installation observe chapter *2 Safety* of this document.

5.1 Requirements on the place of use

The place of use must fulfil the requirements listed below.

- The ground must be clean, level and able to bear a sufficient load.
- There are no local oscillations that can be transferred to the pump.
- The ambient temperature is at least 0 °C up to maximum 40 °C.

Operator-side measures feed line and discharge line

- Bolt the provided fastening points to the foundation for proper setup of the pump according to the usual rules of mechanical engineering.
- Do not use the pump and its connecting pieces to support the pipeline (EN 809 5.2.1.2.3 and EN ISO 14847).
- Follow the general rules of mechanical engineering and plant construction and the regulations of the manufacturers of connecting elements (for example flanges). These regulations may include information on tightening torques, max. permissible angular misalignment, tools/equipment to use.
- Be sure to avoid any strain on the pump.
- Ensure stable construction for mounting of the pump and piping. Insufficiently stiffened substructures may cause an overall structure capable of oscillating, which is excited to oscillate by hydraulic and/or motor forces during changing operating conditions in the system.
- The suction line must be hermetically sealed and laid such that no air pockets can form.
- Avoid tight bends and valves directly in front of the pump. They impair the incoming flow of the pump and the NPSH of the system.
- The suction head of the system must not be larger than the suction head guaranteed by the pump.
- The piping nominal diameters of the system should be equal to or greater than the DNE or DNA connections of the pump.
- For suction operation, install a foot valve.
- Route the suction line in ascending direction and the supply line at a slight slope towards the pump.
- If the local conditions do not permit a continuous ascent of the suction line: Install a venting option at its highest point.
- Install a shut-off valve in the supply line close to the pump.
- Open the suction side shut-off valve completely during operation.
- Do not use the suction side shut-off valve for controlling.
- Install a shut-off valve in the pressure line close to the pump. This can be used to control the flow rate.
- Ensure adequate ventilation. Avoid sucking in the heated exhaust air also of adjacent units. Maintain minimum distances.

Copyright @ GEA Hilge
2026 - All rights reserved

Operator-side measures electrical connection

- Have the electrical connections be made by a licensed electrician.
- Follow the VDE as well as local regulations, in particular the safety regulations.
- Compare the voltage indicated on the motor plate with the operating voltage. The power supply properties must match the specifications on the nameplate.
- Install motor isolator.
- Use a motor suitable for frequency converter operation.
- Use a dU/dt filter to avoid voltage spikes or a motor with reinforced windings.

Operator-side measures flushing for mechanical seals

- Always connect the flushing lines such that supply for flushing is always ensured.
- Ensure that flushing fluid is supplied even when checking the motor's direction of rotation.
- Ensure that the flushing pressure does not exceed 0.2 bar / 2.9 psi.
- Provide for lost flushing.

Operator-side measures vertical pump installation

- Fasten pump with suitable heavy-duty anchors. The pump tends to tip over due to the elevated centre of gravity.
- Position the pump part always below the motor. If leakage occurs, the liquid cannot ingress into the motor.

Spatial requirements with horizontal set-up

If pumps are set up horizontally, observe the following minimum clearances.

Pay attention to motor power.

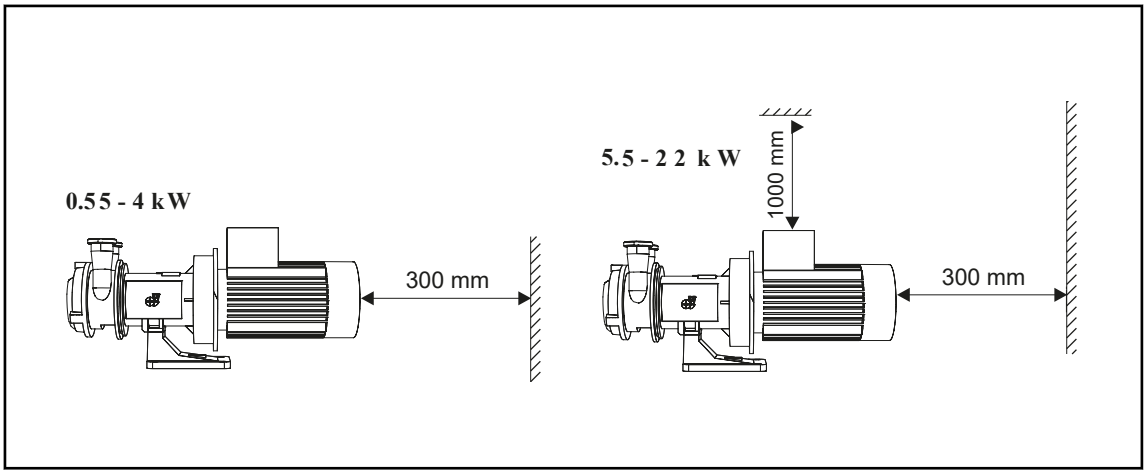

Figure 5-1 - Minimum clearances with different motor sizes

Copyright @ GEA Hilge
2026 - All rights reserved

5.1.1 Reducing noises and vibration

Foundation and vibration absorbers

To achieve optimum performance and to minimize noise and vibration, it is recommended to provide the pump with vibration absorbers. In general, this should always be considered for pumps with motor sizes starting from 11 kW (15 hp).

But unwanted vibrations and noises occur also with smaller motor sizes. Noise and vibration are caused by the rotating parts in the motor and the pump and by the flow in the pipes and fittings. The effect on the environment is subjective and depends largely on the correct installation and the nature of the rest of the system.

Vibration damping is best achieved if the pump is set up on a flat, solid concrete foundation. As a guideline, the concrete foundation should be 1.5 times as heavy as the pump.

To avoid the transmission of vibrations to the building, it is recommended to disconnect the pump foundation from parts of the building using vibration absorbers.

Selecting the correct vibration absorber requires the following data:

- Forces transmitted via the vibration absorber.
- Motor speed, taking a speed control into account if appropriate.
- Required damping in % (suggested value: 70%).

The correct damper depends on the respective installation. An incorrectly designed damper may even increase the vibration. Vibration absorbers should therefore be designed by the vendor of the vibration absorber.

Copyright @ GEA Hilge
2026 - All rights reserved

Compensators

If the pump is mounted on a foundation along with vibration absorbers, be sure to install compensators at the pipe connections. This prevents the pump from “hanging” in the connections.

Compensators are installed to

- absorb expansion/shrinking in the piping caused by varying fluid temperatures.
- reduce mechanical stress occurring in conjunction with pressure surges in the system.
- absorb noise caused by the system in the piping (only rubber ball compensators).

Compensators must not be used to compensate for inaccuracies in the piping, for example, to compensate for an offset in the centre of the connections.

Install the compensators both on the suction side and outlet side at a minimum distance to the pump, which is 1-1.5 times the nominal diameter of the piping. This allows for an improved flow on the suction side of the pump, as well as reduced pressure drop on the outlet side.

For connections with a size over DN 100 (4"), we always recommend compensators with length limiters.

The pipes must be supported in such a way that they cannot cause strain in the compensators and in the pump. Follow the manufacturer's instructions and hand them over to the person responsible or to the plant builder.

Vibration may cause the following damage:

- Damage to roller bearings of pump and motor
- Damage to the mechanical seal
- Increased coupling wear
- Damage to shaft/hub connections
- Cracks on pump ports
- Loosening of screw connections
- Cable breaks in the motor connection
- Contacting of pump impellers

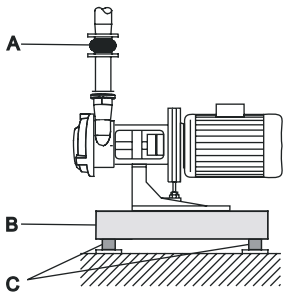

Figure 5-2 - Installation of vibration absorbers

Position	Description	Position	Description
	A - Compensators		B - Solid base
	C - Vibration absorber		

Copyright @ GEA Hilge
2026 - All rights reserved

5.2 Assembly preparations

Unpacking and checking the scope of delivery

Prerequisites

- None

1. Remove transport packaging.
2. Remove all the plastic films and caps at the connections.
3. Check delivery for completeness in accordance with the packing list.
4. Check delivery for possible property damage.
5. Dispose of packaging material in accordance with the pertinent regulations.

⇒ The pump has been unpacked and scope of delivery checked.

Checking smooth running of the impeller

Prerequisites

- The pump has been removed from the packaging and is ready and easily accessible.

Tools

- Screwdriver, spanner

1. Remove motor shroud (if appropriate).
2. Remove the motor fan cover.
3. Heed the direction of rotation of the pump (arrow).
4. Carefully rotate the shaft of the impeller. The shaft should be easy to rotate. If the impeller rubs against something, it has some damage that may have happened during transport of the pump. If the impeller rubs, contact GEA Hilge Customer Service.
5. If the impeller is rotating freely: attach the motor fan cover again.
6. Attach the motor shroud (if appropriate).

⇒ The impeller has been checked for running smoothly.

Copyright @ GEA Hilge
2026 - All rights reserved

5.3 Set-up, assembly, connection

Setting up and aligning

Responsibility

- Customer specialist

Prerequisites

- *5.1 Requirements on the place of use* are fulfilled.

Tools

- Machine spirit level
- Spanner
- Fastening material (if appropriate)

1. Note the permissible type of set-up. The pump is designed for horizontal operation.

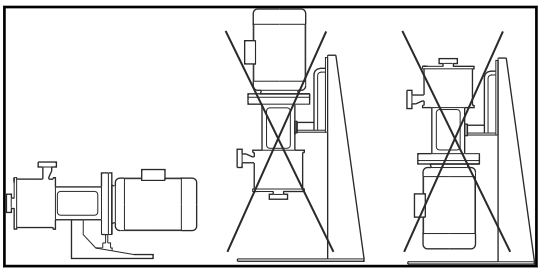

Figure 5-3 - Permissible set-ups of the pump

2. Level the unit via the machined planar surfaces of the ports using a machine spirit level. Compensation by adjusting the machine feet or by using shims.
3. Tighten the fastening screws evenly crosswise (where applicable).

⇒ The pump has been set up and aligned.

Copyright @ GEA Hilge
2026 - All rights reserved

5.3.1 Installation in the piping system

Installation in the piping system

Responsibility

- Customer specialist

Prerequisites

- The pump is free of packaging material.
- Transport covers have been removed from suction port and discharge port.

1. Install the pump in the pipeline according to type of operation mode (gravity feed mode / suction mode). *Operator-side measures feed line and discharge line*, note*28* page

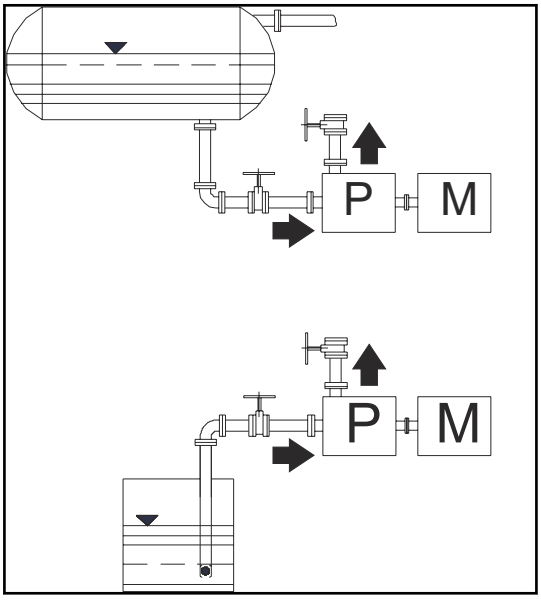

Figure 5-4 - top: gravity feed mode | bottom: suction mode | P - pump | M - motor

⇒ The pump has been installed in the pipeline.

5.3.2 Mechanical seal

Dry running of the mechanical seal

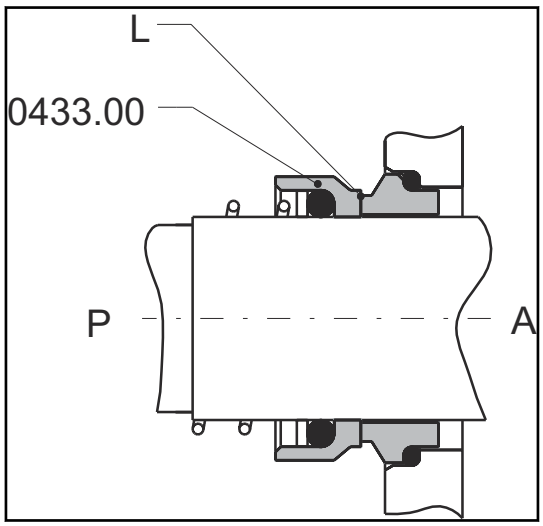

Figure 5-5 - Single-acting mechanical seal

For correct sealing, the mechanical seal (0433.00) requires a lubricant film (L) between the sliding surface on the atmosphere side (A) and product side (L). If the lubrication film is missing or interrupted between the sliding surfaces, dry running occurs. The friction heat generated by the direct contact of the sliding surfaces leads to the destruction of the mechanical seal. Depending on the material pairing, this can take place within a few seconds.

Copyright @ GEA Hilge
2026 - All rights reserved

5.3.3 Connecting the pump to the power supply

⚠DANGER

Live parts

Electrical shocks can cause serious personal injuries or death.

- Only allow properly qualified staff to work on the electrical equipment.
- Prior to establishing electrical connections, check the maximum permissible operating voltage.

⚠DANGER

For motors with frequency inverter (tronic): Electric shock by touching live parts!

Electrical shock can result in serious personal injury or death.

- Even if the power supply is switched off, touching electrical parts may cause an electric shock.
- Disconnect the power supply and wait at least four minutes before touching electrical components.

⚠CAUTION

Danger to due short circuit or electrical overloading

Short circuit due to electrical overloading can lead to damage to pump and system and can trigger fire.

- Implement measures for motor monitoring in accordance with the motor operating manual. The motors selected by GEA Hilge are equipped with PTC thermistors to monitor the winding temperature. These must be connected to suitable motor isolators. The documents supplied with the motor contain detailed information on this.

5.3.3.1 Operator-side pre-requisites equipotential bonding

⚠CAUTION

Electrical Voltage Due to Potential Differences

The occurrence of potential differences can lead to injury to persons and damage to property.

- Properly earth the pump and motor to achieve potential equalisation.

Earthing the motor

Equipotential bonding for the motor is performed via the protective conductor connection in the terminal box.

Copyright @ GEA Hilge
2026 - All rights reserved

Connecting the pump to the power supply

Responsibility

- Trained customer specialist

Prerequisites

- Conditions for connecting the pump to the power supply are fulfilled.
- The pump has been earthed in accordance with the specifications in this operating manual.

Tools

- Spanner
- Screwdriver

1. Please note the order data and prescribed connection voltage.
2. Connect the pump in star circuit.

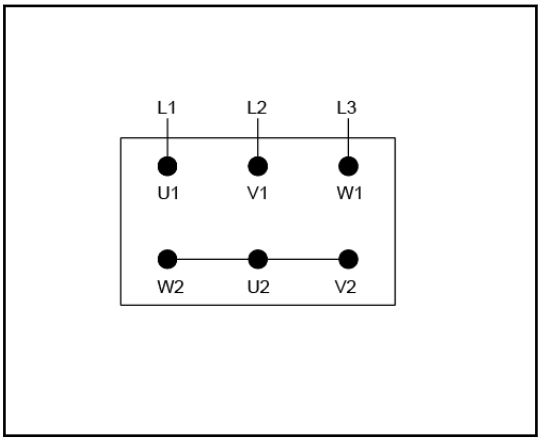

Figure 5-6 - Connection diagram for star circuit

3. Connect the pump in delta circuit.

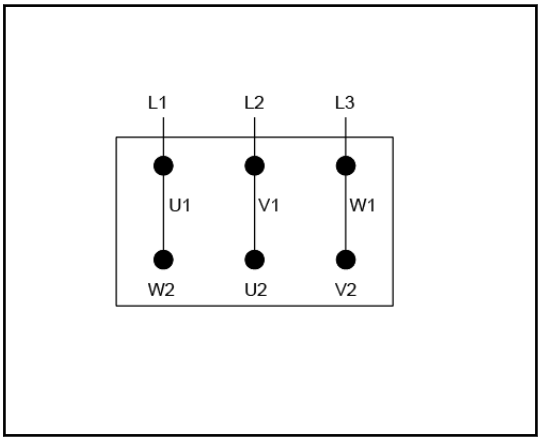

Figure 5-7 - Connection diagram for delta circuit

⇒ The pump is connected to the power supply.

Copyright @ GEA Hilge
2026 - All rights reserved

Checking the direction of rotation after connecting

Responsibility

- Trained customer specialist

Prerequisites

- The pump has been connected to the power supply.
- All safety devices have been installed.
- All hydraulic connections have been checked for a firm fit.
- The pump is earthed.

Tools

- Screwdriver, spanner

1. Open check valves.
2. Fill the pump (system).
3. For double mechanical seal / quench version, connect the flushing fluid.
4. Note the direction-of-rotation arrow on the pump.
5. Switch on the motor briefly (1-2 seconds).
6. Compare the direction of rotation with the specified direction (arrow).
7. If the direction of rotation does not correspond to the specified one, correct the electrical connections.

⇒ The direction of rotation has been checked and corrected if necessary.

5.3.3.2 Connecting frequency inverter

All three-phase motors can be connected to a frequency converter. Frequency converter operation may subject the insulation of the motor to a higher load so that louder motor noise than in the normal case may occur due to eddy currents caused by voltage spikes.

Large motors driven by a frequency converter are loaded by bearing currents. For pump motors that are used with an external frequency converter, HILGE recommends the use of insulated motor bearings for sizes of 22 kW and above to avoid increased wear of the motor bearings by possible bearing currents.

Check the following operating conditions if the pump is operated using a frequency converter:



Incorrect operation of the frequency converter

Follow the manufacturer's instructions for the installation and operation of a frequency converter.

Operating conditions	Measures
Noise-sensitive applications	Install a dU/dt filter between the motor and frequency converter (reduces voltage spikes and thus noise).
Particularly noise-sensitive applications	Install sinusoidal filter.
Cable length	Use a cable which satisfies the conditions prescribed by the manufacturer of the frequency converter.

Copyright @ GEA Hilge
2026 - All rights reserved

Operating conditions	Measures
Supply voltage up to 500 V	Check that the motor is suitable for frequency converter operation.
Supply voltage between 500 V and 690 V	Install a dU/dt filter between the motor and the frequency converter (reduces voltage peaks and thus noise), or check whether the motor has a reinforced insulation.
Supply voltage 690 V and above	Install a dU/dt filter between the motor and the frequency converter and check whether the motor has a reinforced insulation.

Copyright @ GEA Hilge
2026 - All rights reserved

6 Commissioning

This chapter contains information for initial start-up and every recurring start-up of the pump. In addition, this chapter describes the checks and tests to be performed during this. The target group for this chapter are all those who carry out actions at the pump in this context.

INFO Observe chapter *2 Safety* for every start-up.

6.1 Preparing commissioning

6.2 Operating conditions

Checking conditions of use

Compare the information of the following documents with the pump's intended conditions of use:

- Pump data sheet (order documents)
- Nameplate
- Operating manual
- Test bench acceptance
- Make sure that the pump is operated only under the specified conditions of use. These conditions apply to pressure, temperature and pumped medium, for example.
- Carry out a cleaning cycle before the first start-up or after conversion of the pump.
- Make sure there are no foreign objects in the pump.

Copyright @ GEA Hilge
2026 - All rights reserved

6.3 Initial start-up

Initial start-up of the pump

Responsibility

- Operating staff

Prerequisites

- All connections have been checked for a firm fit.
- All safety devices have been installed.
- The electrical connections are correct.
- The pump and the system-side pipe system have been cleaned.

Tools

- Screwdriver, spanner

ATTENTION

Fast increase and pressure and heating due to pumping against a closed shut-off valve

Pumping against a closed shut-off valve can cause damage to the pump.

- Open the shut-off valve after 30 seconds at the latest.

1. Open check valves in the system.
2. Fill the pump along with the system.
3. Vent the pump along with the system.
4. With flushed mechanical seals, connect the flushing liquid. Start flushing to prevent dry running.
5. Fully open the suction-side check valve.
6. Close the pressure side check valve.
7. Switch on the pump.
8. Slowly open the pressure side check valve.

⇒ Initial start-up is completed.

INFO If the head does not rise after the pump has been switched on, switch the pump off, vent it again and repeat the work steps in section *Initial start-up of the pump*.

Functional testing of the mechanical seal

INFO In the running-in phase, mechanical seals, regardless of size, type or design, are subject to low leakage. In individual cases, it may be necessary to tolerate a low, visible leakage or to counteract it with suitable measures. After the running-in phase, an intact mechanical seal works practically without leakage. If pumped or flushing medium leaks out, switch the pump off and replace the mechanical seal (have the seal replaced).

Responsibility

- Operating staff

Prerequisites

- The pump has been started-up.

1. Inspect the pump and check whether liquid is escaping at the mechanical seal.

⇒ The function of the mechanical seal has been checked.

Copyright @ GEA Hilge
2026 - All rights reserved

6.4 Restarting

Following temporary decommissioning

Temporary decommissioning includes putting out of operation for maintenance and repair work.

The pump can be put back into operation after temporary decommissioning without additional measures, see *6.3 Initial start-up*.

6.5 Monitoring operation

Dangerous situations during operation can be avoided by safety-conscious and proactive behaviour of the personnel.

For operation, the following principles apply:

- Monitor the pump during operation.
- Do not modify or disassemble safety devices or put them out of operation. Check safety devices at regular intervals.
- All guards and hoods must be fitted as intended.
- The installation location of the pump must always be properly ventilated.
- Structural changes to the pump are not permitted. Report any change to the pump immediately to the person in charge.

6.6 Shutdown

Shutdown

Responsibility

- Operating staff

Prerequisites

- The pump and valves are freely accessible.

1. **CAUTION** Pressure surge
   A pressure surge can cause damage to the pump and system.
   - Always close shut-off valves slowly.

   INFO

   A pressure surge is a sudden increase in pressure in the system. This pressure increase may be triggered by quickly shutting off the flow in the pressure pipe, in addition to other causes. If a pressure surge occurs, the maximum permissible pump pressure is much higher for a short time.

   Close the pressure side shut-off valve.
2. Switch off the pump.
3. Close the suction side shut-off valve.
4. Switch off the flushing.
5. Make sure that the pump is depressurised.

⇒ The pump has been shut down.

Copyright @ GEA Hilge
2026 - All rights reserved

7 Cleaning

This chapter contains information about cleaning the pump. In addition, this chapter provides information about cleaning intervals and the use of cleaning agents. The target group for this chapter are all those who carry out actions related to cleaning at the pump.

INFO For all cleaning, observe chapter *2 Safety* of this document.

7.1 General

To ensure the quality of sensitive fluids, pumps must be cleaned immediately after each use. Only in this way will adhesions and deposits be removed completely and contamination of the products be prevented. To achieve the best possible results, Hilge pumps are optimised with regard to gap and dead spaces, designed according to DIN EN 13951, and resistant to the cleaning agents referred to in the following chapter. Cleaning is carried out inside the system; no parts need to be removed or dismantled.

In general, a distinction is made between CIP and SIP. The procedures must comply with the state of the art and the EC directives. In any case, the operator must ensure that the target specifications are reached and applied as intended using the cleaning and sterilisation procedures, as well as the working temperatures and steps.

7.2 CIP cleaning

CIP stands for Cleaning in Place, the pump is completely rinsed with cleaning agents. During CIP cleaning, run the pump at a flow speed of at least 1.5 m per second. Execute total drainage for horizontally installed pumps utilizing the drain valve (e.g., GEA VTP valve), drain port, or by downward rotation of the discharge port.

The cleaning agent used must be suitable for the respective cleaning task.

The following table lists approved detergents and disinfectants and their permitted concentrations. Alternatively, information from DIN11483 Part 1 can be used.

Cleaner type	Chemical designation	Max. concentration [%]	Max. temperature [°C] (°F)	Permissible pH	Max. permissible Cl content in the preparation water [mg/l]	Max. permissible contact time [h]
Alkaline	NaOH	2.50%	85 (185) [2]	13-14	150	3
Acid	H_2SO_4 H_3PO_4 HNO_3	2% [3]	60 (140)		150 [3]	1
Acid	$C_2H_4O_3$	0.01%	90 (194)		150	0.5

Copyright @ GEA Hilge
2026 - All rights reserved

Cleaner type	Chemical designation	Max. concentration [%]	Max. temperature [°C] (°F)	Permissible pH	Max. permissible Cl content in the preparation water [mg/l]	Max. permissible contact time [h]
Acid	$C_2H_4O_3$	0.15%	20 (68)		150	2
Acid	Iodophore	50 mg/l act. Iodine	30 (86)	>3	150	3

[2] Depends on the maximum permissible temperature of the pump

[3] CrNi steels and CrNiMo steels

Cleaning agents that contain hydrochloric acid (HCl) or hydrofluoric acid (HF) must not be used. Consult the supplier for the use of special cleaning agents and procedures with respect to the materials. Thoroughly rinse the pump with water to remove any cleaning agents leaving no residues. The maximum permissible temperatures can be found in chapter *3.3.7 Operating temperatures*.

7.3 SIP cleaning

SIP stands for sterilisation in place, in which the pump is sterilised with superheated steam. For steam sterilization or sanitization, minimum temperatures of 121 ° C (250 ° F) must be applied to all wetted surfaces. The maximum permissible temperatures can be found in section *3.3.7.1 Maximum media temperatures*.

The pump must not be in operation during steam sterilisation. The cooling period after the SIP process depends on pump size and external conditions. Check the pump temperature before switching it on again.

⚠CAUTION



Danger from hot surfaces

Touching hot surfaces can lead to scalds or burns.

- Do not touch the pump during steam sterilisation and the cooling phase. Surface temperatures may rise above 100 °C (212 °F).

Copyright @ GEA Hilge
2026 - All rights reserved

7.4 Cleaning at standstill

Manual exterior cleaning

INFO Regular manual external cleaning of the pump unit facilitates proper operation. Dry cleaning is preferable to wet cleaning. The cleaning intervals depend on the degree of contamination. Rinse with clear water when aggressive cleaning agents are used.

Responsibility

- Operating staff

Prerequisites

- The pump has been shut down.

Tools

- Soft cloth or brush
- Cleaning agents

1. Ensure the tightness of the motor (terminal box, condensation holes).
2. **ATTENTION** Danger due to high-pressure water jet
   Cleaning with a high-pressure cleaner can cause damage to the pump.
   - Only wipe the pump down or rinse it off without pressure.

   Clean the outside of the pump with a soft cloth or brush and use warm water if necessary.
3. Vent the pump along with the system.
4. Remove dust and debris that may clog the fan and cooling fins of the engine.

⇒ Manual exterior cleaning is completed.

Copyright @ GEA Hilge
2026 - All rights reserved

8 Maintenance

This chapter contains information about the maintenance, inspection and repairs of the pump. The target group for this chapter are all those who carry out actions at the system in this context.

INFO During all maintenance actions, observe chapter *2 Safety* of this document.

8.1 Maintenance and inspection

⚠WARNING

Danger to life due to unauthorised or uncontrolled restart!

Unauthorised or uncontrolled restart can lead to serious injuries or even death.

- During all work on the system: make sure that the system is secured against unauthorised or uncontrolled restart.
- Secure actuation device with a lock.
- In the case of pumps with trolley, disconnect the mains plug and fasten it to the trolley in such a way that it is visible for maintenance personnel.
- After completing work on the system: make sure that there is no-one still in the danger zone before the system is switched back on.

Measures to secure against unintentional restart

- Keep removed mains plugs, circuit breakers or fuse inserts in a safe place and replace them by blocking plugs or dummies.
- Disconnect circuit breakers, switch cabinet or fuse box and keep the key to the lock in a safe place.
- Attach suitable signs prohibiting switch-on or warning signs.

Copyright @ GEA Hilge
2026 - All rights reserved

8.1.1 Maintenance schedule

To prevent any faults and guarantee maximum operational safety of the pump, GEA recommends the following inspection and maintenance work.



Hygiene risk, food safety

Worn out and not fully functional components may lead to the contamination of the pump. Pay close attention to the condition of the O-rings during regular inspections.

Component / assembly	Measure	Interval	Qualifications
Mechanical seal	Inspection, always replace mechanical seals completely when worn.	When used in media with temperatures 60 °C to 130 °C (140 °F to 266 °F): after 2,000 operating hours or three months When used in media with temperatures< 60 °C (< 140 °F): after 9,000 operating hours or 12 months.	Trained customer specialist
O-rings		When used in media with temperatures 60 °C to 130 °C (140 °F to 266 °F): after 2,000 operating hours or three months When used in media with temperatures< 60 °C (< 140 °F): after 9,000 operating hours or 12 months. Independently of the period of use, O-rings must be replaced if the following properties are indicated: • The O-ring is deformed at one or more locations. • The O-ring has cracks. • The surface of the O-ring is porous and brittle. • The O-ring has lost its elasticity.	
Clamp shaft Pump casing	Check screw connection, tighten if nec.	Monthly	Customer specialist
Motor, where appropriate	Relubricate	On motors with grease nipple, the specifications for relubrication, type of grease, grease quantity, and other information as applicable are given on the lubrication or nameplate.	Customer specialist
Pump	Visible inspection for tightness and correct function	During every operation / every start-up	Operator

Copyright @ GEA Hilge 2026 - All rights reserved

8.1.2 Maintenance jobs

Replace O-rings

INFO The O-rings should be replaced every time the pump is disassembled.

Prerequisites

- Access to the pump
- The pump is at a standstill and secured against restart.

1. Disassemble the pump. See *8.2 Dismantling*.
2. Replace O-rings. The position of the different O-rings can be seen in *Parts overview SIPLA BLOC*.
3. Assemble the pump.

⇒ The O-rings have been replaced.

Replace the mechanical seal

Prerequisites

- Access to the pump
- The pump is at a standstill and secured against restart.

1. Disassemble the pump. See *8.2 Dismantling*.
2. Replace the mechanical seal.
3. Assemble the pump. See *8.3.3 Installing single mechanical seal* or *8.3.4 Installing the single encapsulated mechanical seal*.

⇒ The mechanical seal has been replaced.



Observe the motor manual

Hazard if the operating manual is not read before actions at the motor.

Copyright @ GEA Hilge
2026 - All rights reserved

Lubricating the motor

INFO Observe the motor operating manual.

Motors without grease nipple

Motors without grease nipple are equipped with lifetime lubrication. How long grease can be used depends on the temperature and determines the service life of the bearings. Prerequisite is that the motor must be used according to the specifications in the catalogue.

Motors with grease nipple

On motors with grease nipple, the specifications for relubrication, type of grease, grease quantity, and other information as applicable are given on the lubrication or nameplate.

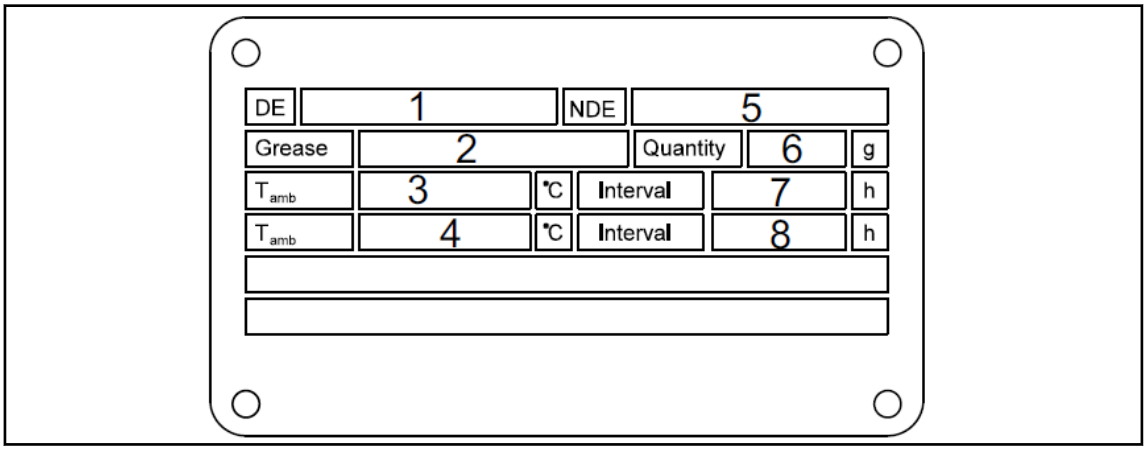

Position	Description	Position	Description
1	Bearing on drive side	2	Type of grease
3	Ambient temperature	4	Ambient temperature
5	Bearing, not drive side	6	Grease grade
7	Lubricating interval	8	Lubricating interval

INFO The nameplate may differ from the presented layout.

8.2 Dismantling

Disassembly of the pump is carried out in the reverse order of assembly. For this purpose, obtain the work steps from the respective sections in the chapters *8.3 Assembly*.

Pre-requisites for disassembly:
- The pump has been disconnected from the power supply.
- The pump is depressurised.
- The pump has cooled down.
- The pump has been secured against being switched on unintentionally.
- If hazardous media have been pumped, the pump has been decontaminated.

Tools from the GEA Hilge make disassembly easier and avoid damage to the pump, see page *49*.

Copyright @ GEA Hilge
2026 - All rights reserved

8.3 Assembly

Assembly tool kit

Tools from the GEA Hilge assembly tool kit prevent damage to the mechanical seal during assembly.

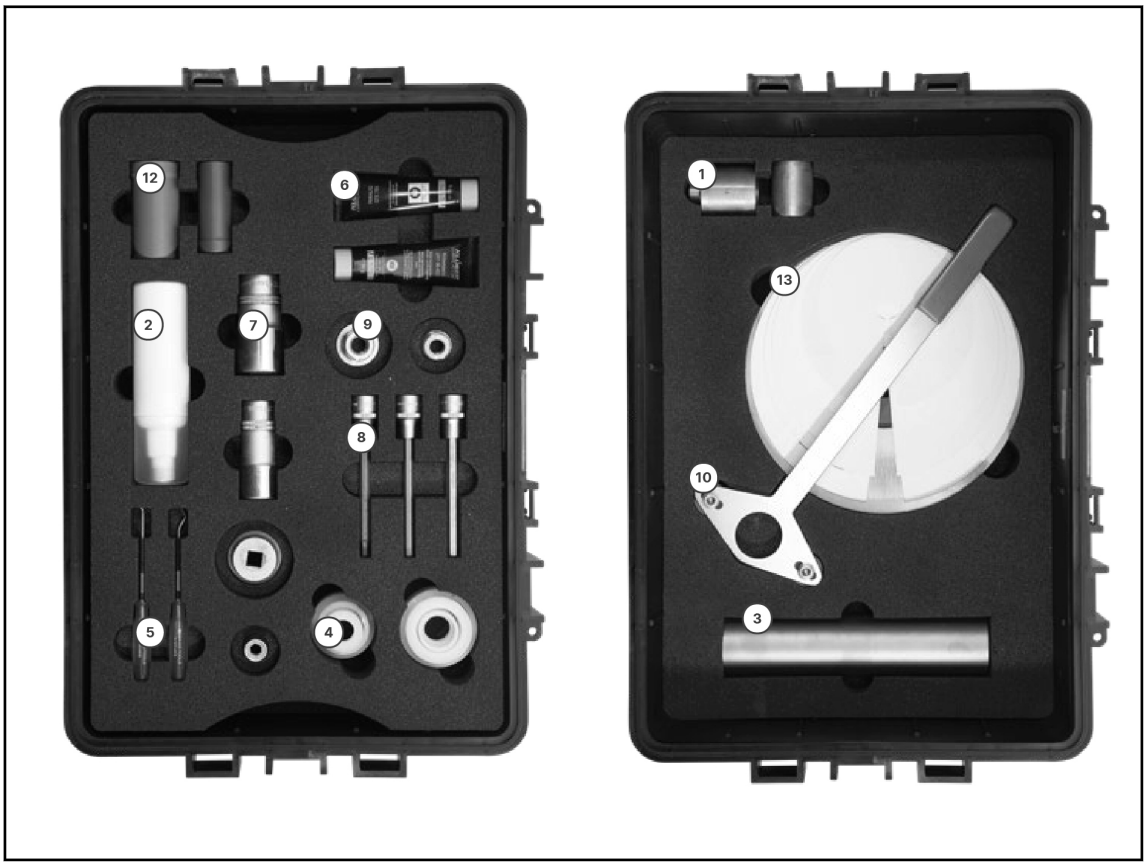

Figure 8-1 - GEA Hilge assembly tool kit

Copyright @ GEA Hilge
2026 - All rights reserved

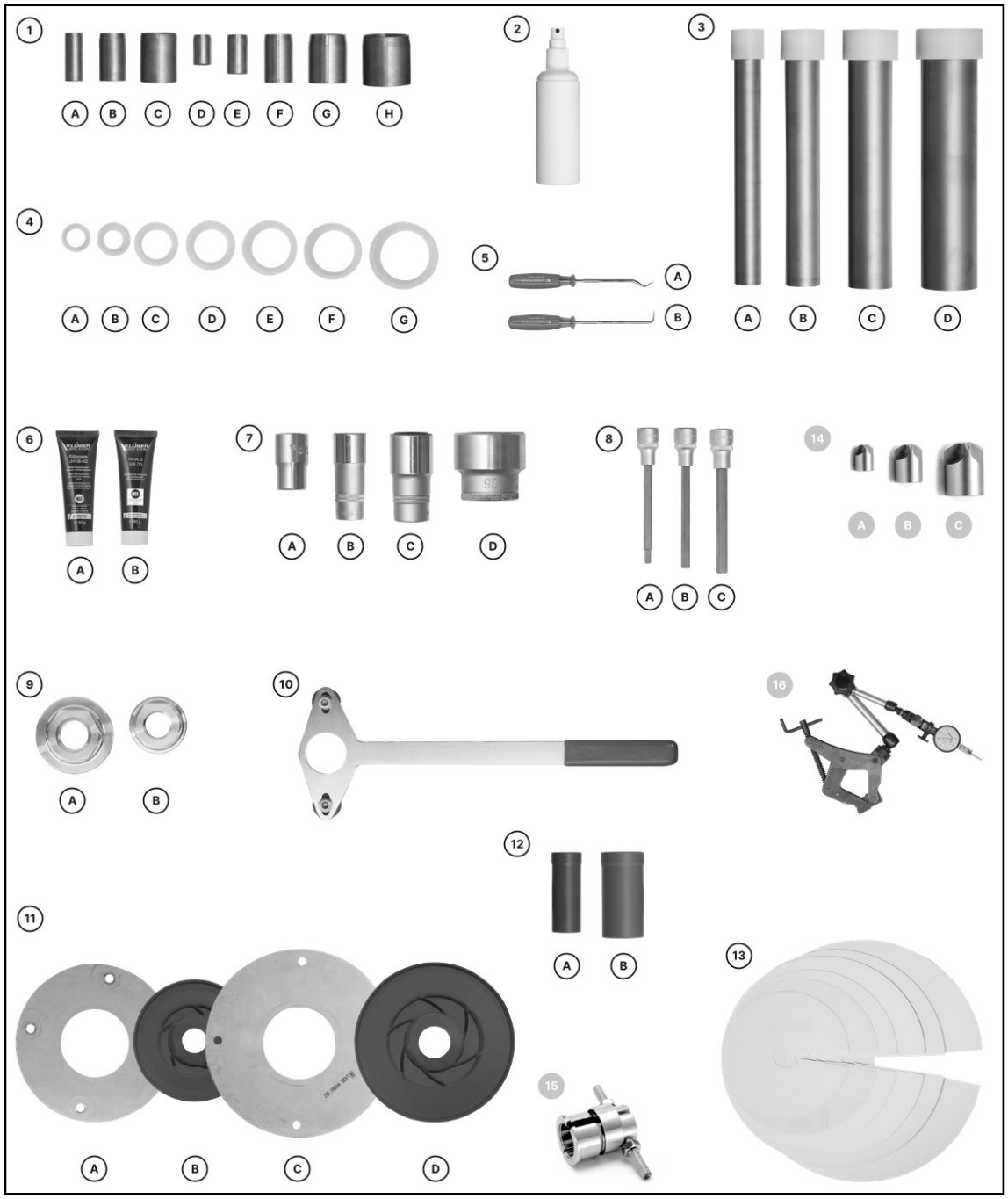

Figure 8-2 - Tools in the GEA Hilge assembly tool kit

Contents and use

Tools for the GEA Hilge SIPLA

Image position	Designation	Ø 19[4]	Ø 28[5]	Ø 38[6]
1A	Assembly sleeve Ø 19	•		
1B	Assembly sleeve Ø 28		•	
1C	Assembly sleeve Ø 38			•
2	Spray bottle 200 ml	•	•	•

Copyright @ GEA Hilge
2026 - All rights reserved

Image position	Designation	Ø 19[4]	Ø 28[5]	Ø 38[6]
3A	Pipe assembly tool Mechanical seal Ø 19, Ø 22	•		
3B	Pipe assembly tool Mechanical seal Ø 28, Ø 30		•	
3C	Pipe assembly tool Mechanical seal Ø 38, Ø 40			•
4A	Assembly sleeve, plastic adapter Ø 19	•		
4C	Assembly sleeve, plastic adapter Ø 28		•	
4E	Assembly sleeve, plastic adapter Ø 38			•
5A	Hook, curved	•	•	•
5B	Hook, 90° angle	•	•	•
6A	Klüberpaste UH1 96-402, white 80 g	•	•	•
6B	Silicone grease Paraliq GTE 703, 80 g	•	•	•
7B	Socket wrench a/f 17	•		
7C	Socket wrench a/f 27		•	
7D	Socket wrench a/f 30			•
14	Locking rod for NOVALOBE & SIPLA	•	•	•
16	Dial gauge	•	•	•

[4] SIPLA 3.1
[5] SIPLA 6.1 | 12.1 | 18.1 | 28.1 | 52.1
[6] SIPLA 65.1 | 90.1

Copyright @ GEA Hilge
2026 - All rights reserved

Parts overview SIPLA BLOC

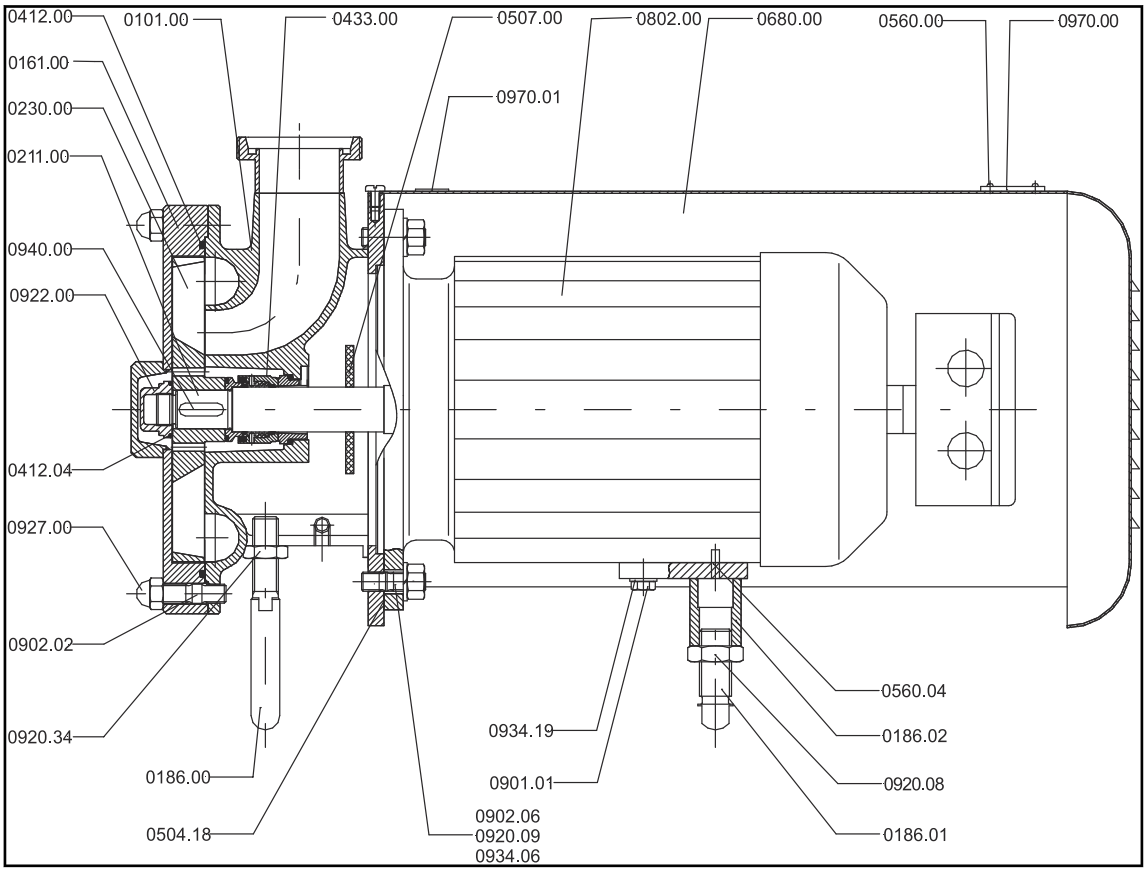

Figure 8-3 - SIPLA BLOC

Pcs.	Part number	Designation	Pcs.	Part number	Designation
1	0101.00	Pump casing	1	0802.00	Motor
1	0161.00	Back plate	1	0901.01	Hexagon head screw
1	0186.00	Machine foot	4	0902.02	Stud screw
1	0186.01	Machine foot	1	0902.06	Stud screw
1	0186.02	Machine foot	2	0920.08	Hexagon nut
1	0211.00	Pump shaft	4	0920.09	Hexagon nut
1	0230.00	Impeller	2	0920.34	Hexagon nut
1	0412.00	O-ring seal	1	0922.00	Impeller nut
1	0412.04	O-ring seal	3	0927.00	Domed nut
1	0433.00	Mechanical seal	4	0934.06	Spring washer
1	0504.18	Spacer ring (not shown)	1	0934.19	Spring washer
1	0507.00	Deflector	1	0940.00	Key

Copyright @ GEA Hilge
2026 - All rights reserved

Pcs.	Part number	Designation	Pcs.	Part number	Designation
4	0560.00	Pin	1	0970.00	Sign
1	0560.04	Pin	1	0970.01	Rotation arrow (not shown)
1	0680.00	Shroud			

8.3.1 Installation instructions

Always observe the following instructions:

- Use tools from the HILGE assembly tool kit for installation.
- Check removed parts for damage and wear, and replace if necessary. Use only proper, clean parts for installation. Clean installation space and contact surfaces before installation.
- Always use original spare parts.
- Only use certified original spare parts for 3-A applications.
- Use no mineral oil greases for the wet section assembly.
- Always replace mechanical seals completely.
- Observe the properties indicating that replacement of the O-rings is necessary, see *8.1 Maintenance and inspection*.
- Use an impact wrench or an impeller nut mounting device to tighten the impeller nut (0922.00).

ATTENTION

Hygiene risk through contamination of the components

Contaminated components contaminate pump and system and can endanger food safety.

- Use suitable chemical cleaning agents to remove impurities in the area of the impeller hub, enclosed threads of impeller nut and pump shaft, O-rings, pump shaft and mechanical seal, for example
- 1. Cleaning with warm water (approx. 40 °C/104 °F) and a commercially available dishwasher cleaner.
- Rinse the cleaned parts with hot water (approx. 80°C) to thoroughly remove bacteria, germs and cleaning agent residues.
- Use a brush and / or other tools without damaging the surface.
- Plan contact-free cleaning in an ultrasonic bath to clean the mechanical seal.

Copyright @ GEA Hilge
2026 - All rights reserved

8.3.2 Installing pump casing

Installing pump casing

Responsibility

- Trained customer specialist

Prerequisites

- Shaft and counter ring holder have been checked for impurities and damage (sharp edges). Parts have been cleaned or replaced if necessary.
- All O-rings of the mechanical seal have been checked for correct seating and adjusted if necessary.
- All sliding facings for O-rings have been moistened with water.

Tools

Equipment and tools from the GEA - Hilge assembly tool kit

- Spray bottle
- Plastic mounting sleeve
- Assembly sleeve

INFO HILGE assembly tools prevent damage to the mechanical seal during assembly.

1. **INFO**

   Do not kink or damage the spacer ring. The spacer ring must be clean.

   Place the spacer ring (0504.18) on the motor flange (0802.00).



2. Grease the threaded pins (0902.06) on the pump casing (0101.00) with Klüber paste.



PUBLIC
Copyright @ GEA Hilge 2026 - All rights reserved

3. Set the pump casing (0101.00) onto the flange (motor or bearing housing).



4. Align the pump casing (0101.00) using a spirit level.



5. Fasten the pump casing (0101.00) using the four hexagon nuts (0920.22) on the motor or bearing housing.



6. Wet the stationary ring (counter ring) of the mechanical seal (0433.00) and the shaft (0211.00) with clean water.



Copyright @ GEA Hilge
2026 - All rights reserved

7. Push the stationary ring of the mechanical seal (0433.00) into the seat of the pump casing (0101.00).

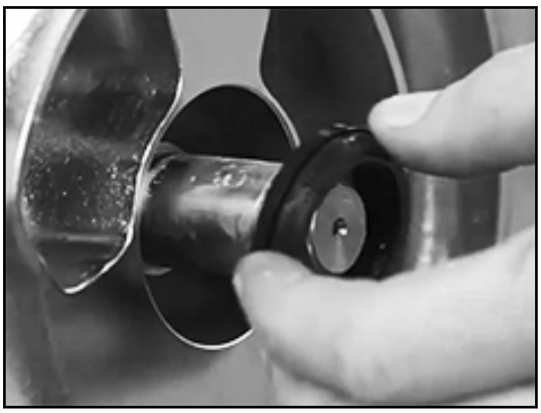

⇒ The pump casing and the stationary ring of the mechanical seal are installed.

PUBLIC

Copyright @ GEA Hilge
2026 - All rights reserved

8.3.3 Installing single mechanical seal

Installing single conical spring mechanical seal

Responsibility

- Trained customer specialist

Prerequisites

- The pump has been disassembled.

Tools

Equipment and tools from the GEA - Hilge assembly tool kit

- Spray bottle
- Plastic mounting sleeve
- Assembly sleeve

INFO HILGE assembly tools prevent damage to the mechanical seal during assembly.

1. Push the assembly sleeve onto the shaft shoulder and wet it with clean water.

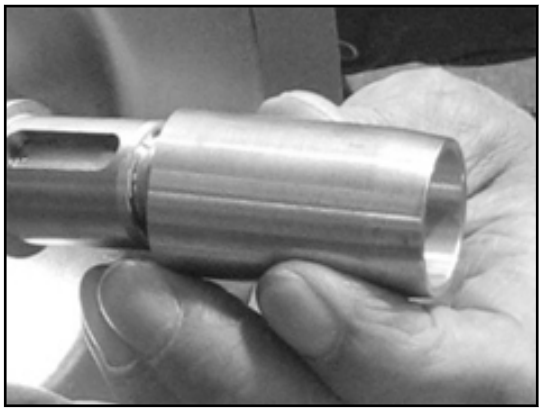

2. Push the rotating unit (rotary ring) of the mechanical seal (0433.00) in the assembled state onto the shaft (0211.00) as far as it will go.

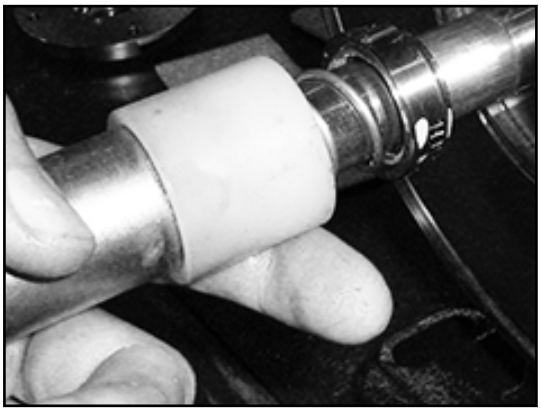

Copyright @ GEA Hilge
2026 - All rights reserved

3. Insert the O-ring (0412.05) into the seal spacer (0557.00) and push it onto the shaft (0211.00).



⇒ The single conical spring mechanical seal is installed.

8.3.4 Installing the single encapsulated mechanical seal

Installing the single mechanical seal - spring encapsulated (hygiene)

Responsibility

- Trained customer specialist

Prerequisites

- The pump has been disassembled.

Tools

Equipment and tools from the GEA Hilge assembly tool kit

- Spray bottle
- Plastic mounting sleeve

INFO HILGE assembly tools prevent damage to the mechanical seal during assembly.

1. **ATTENTION** Danger due to contamination
   Contamination can endanger food safety.
   - Carefully check the seat of the mechanical seal.
   - Pay attention to groove and pin for mechanical seal with anti-twist protection.

   Using a slight rotational movement, push the rotating ring of the mechanical seal (0433.00) onto the pump shaft (0211.00) as far as it will go.



⇒ The single encapsulated mechanical seal is installed.
Further assembly with *8.3.5 Installing the impeller and back plate*

Copyright @ GEA Hilge
2026 - All rights reserved

8.3.5 Installing the impeller and back plate

Responsibility

- Trained customer specialist

Prerequisites

- The mechanical seal has been installed.

Tools

- Equipment and tools from the GEA Hilge assembly tool kit
- Klüber paste UH1 96-402
- Extractor
- Spray bottle
- Socket wrench
- Socket wrench bit

INFO HILGE assembly tools prevent damage to the mechanical seal during assembly.

1. Insert the key (0940.00).



2. Grease impeller seat and shaft thread with Klüber paste.

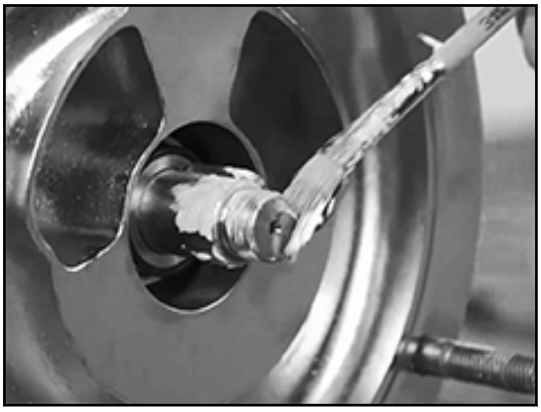

Copyright @ GEA Hilge
2026 - All rights reserved

3. Install impeller (0230.00).



4. **INFO**

   Do not grease the axial contact faces of shaft and impeller nut! Replace the impeller nut (0922.00) if it can be unscrewed by more than 2½ turns by hand.

   Grease the thread of the impeller nut (0922.00) with Klüber paste. Wet the O-ring (0412.04) with clean water and insert it into the impeller nut (0922.00).



5. Tighten the impeller nut (0922.00). Note the torques on page *21*.



6. **INFO**

   The gap size only changes if the impeller (0230.00) or pump casing (0101.00) has been replaced. If the correct gap size is not reached, contact GEA Hilge-Service.

   Check the gap size between pump casing (0101.00) and impeller (0230.00). See *3.3.9 SIPLA gap sizes* for the correct gap size.



PUBLIC

Copyright @ GEA Hilge
2026 - All rights reserved

7. Check the clearance between pump impeller (0230.00) and pump casing (0101.00).



8. **INFO**

   The clearance between impeller (0230.00) and back plate (0161.00) only changes when the impeller (0230.00), the pump casing (0101.00) or the back plate (0161.00) has been replaced. If the correct clearance is not reached, contact GEA Hilge-Service.

   Check the depth of the back plate (0161.00). See *3.3.9 SIPLA gap sizes* for the correct clearances.

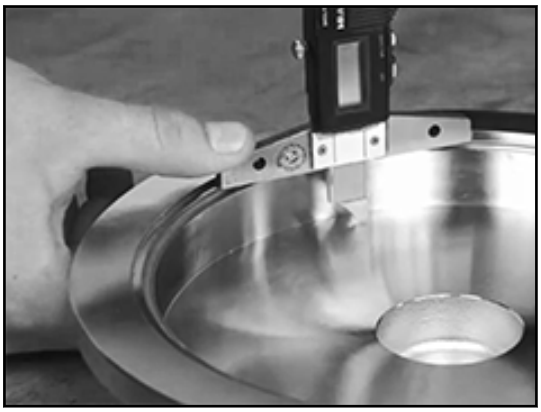

9. Grease the studs (0902.02) on the pump casing (0101.00) with Klüber paste.



10. Insert the O-ring (0412.00) into the back plate (0161.00).



Copyright @ GEA Hilge
2026 - All rights reserved

11. Connect the back plate (0161.00) to the pump casing (0101.00). Make sure that the marks on the back plate and pump casing line up.

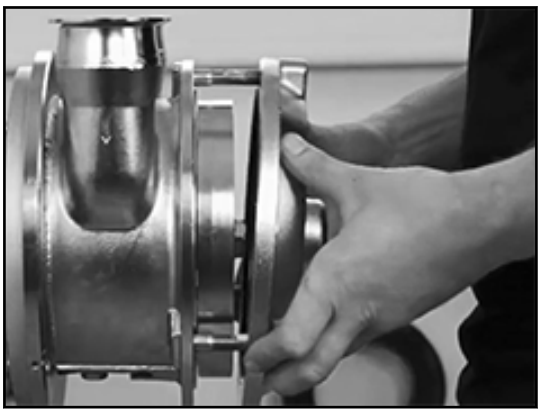

12. Tighten the domed nuts (0927.00). Note the torques on page *21*.

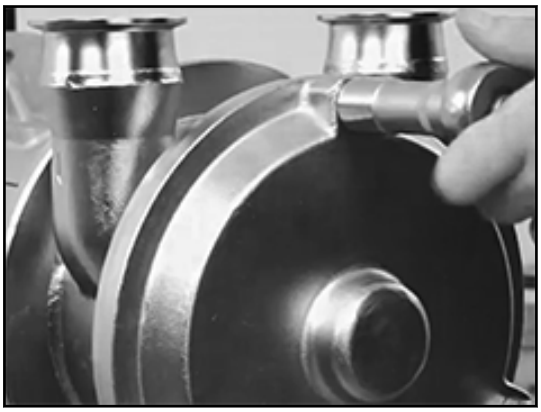

⇒ Impeller and back plate are installed.

PUBLIC

Copyright @ GEA Hilge
2026 - All rights reserved

9 Malfunctions

This chapter contains information about handling faults at the pump. In addition, it describes the personnel qualifications required for the individual actions.

It addresses all those who carry out actions at the pump in this context.

INFO For all troubleshooting, observe chapter *2 Safety* in this operating manual.

9.1 Faults and remedies

Faults and remedies

Malfunction	Possible cause	Measure
Pump does not deliver or pump delivers with inadequate power.	Incorrect electrical connection (2 phases).	Check electrical connection, and correct if necessary.
	Incorrect direction of rotation.	Change phases of power supply (swap motor poles).
	Air in suction line or pump.	Vent and prime suction pipe or pump.
	Back pressure too high.	Reset operating point according to the data sheet. Check system for contamination.
	Suction head too high, NPSH system (supply) too low.	Raise suction side liquid level, fully open the check valve in the suction line.
	Lines clogged or foreign objects in the impeller/ rotor.	Open pump and eliminate malfunctions.
	Air inclusion due to defective seal.	Check and, if necessary, replace pipe seals, pump casing seals and shaft seals.
Motor protection switch turns off, motor is overloaded.	Pump is blocked due to clogging.	Open pump and eliminate malfunctions.
	Pump is blocked by contacting due to strain on the pump body via the piping. (Check for damage.)	Install pump without strain, support piping by fixed points.
	Pump runs beyond its rated operating point.	Adjust operating point according to data sheet.
	The fluid density or viscosity of the liquid is higher than stated in the order.	If a lower power than specified is sufficient, reduce the flow rate on the outlet side. Otherwise provide a more powerful motor.
	Motor protection switch is not set properly	Check the setting, replace the motor protection switch if necessary.

Copyright @ GEA Hilge
2026 - All rights reserved

Malfunction	Possible cause	Measure
	Motor runs on 2 phases.	Check electrical connection, replace defective fuse.
Pump makes too much noise. Pump runs unevenly and vibrates.	Suction head too high, NPSH system (supply) too low.	Raise suction side liquid level, fully open the check valve in the suction line.
	Air in suction line or pump.	Vent and prime suction pipe or pump.
	Back pressure is less than indicated.	Adjust operating point according to data sheet.
	Impeller is unbalanced.	Clean, check and balance the impeller.
	Worn internal parts.	Replace parts.
	Pump is strained (start-up noise - check for damage.)	Install pump without strain, support piping by fixed points.
	Bearings are damaged.	Replace bearings.
	Bearings have too little, too much or inappropriate lubricant.	Add, reduce or replace lubricants.
	Motor fan defective.	Replace the fan motor.
	Foreign objects in the pump.	Open and clean the pump. With self-priming pumps connect a screen ahead if necessary.
Leakage at the pump body, connections, mechanical seal, gland or socket seal.	Pump is strained, causing leaks at the pump body or at the connections.	Install pump without strain, support piping by fixed points.
	Housing seals and connection seals defective.	Replace casing seals and/or connection seals.
	Mechanical seal soiled or sticky.	Check and clean mechanical seal.
	Mechanical seal worn.	Replace the mechanical seal.
	Surface of shaft or shaft sleeve shrunk.	Replace the shaft or shaft sleeve, repack packed gland.
	Elastomer unsuitable for the pumped fluid.	Use suitable elastomer for pumped fluid and temperatures.
Impermissible temperature increases at pump, bearing housing or motor.	Air in suction line or pump. Suction head too high, NPSH system (supply) too low.	Vent and prime suction pipe or pump. Raise suction side liquid level, fully open the check valve in the suction line.
	Bearings have too little, too much or inappropriate lubricant.	Add, reduce or replace lubricants.

Copyright @ GEA Hilge
2026 - All rights reserved

Malfunction	Possible cause	Measure
	Pump with bearing housing is strained.	Install pump without strain, support piping by fixed points. Check coupling alignment.
	Axial thrust is too high.	Check the relief holes in the impeller and the split rings at the inlet.
	Motor protection switch is defective or not set properly.	Check the setting, replace the motor protection switch if necessary.
	Pressure valve closed.	Open pressure valve.

Copyright @ GEA Hilge
2026 - All rights reserved

10 Decommissioning, dismantling and disposal

This chapter contains information about decommissioning the pump and describes dismantling and disposal. The target group for this chapter are all those who carry out actions at the machine in this context.

This chapter contains information about decommissioning and disposing of the pump. The target group for this chapter are all those who carry out actions at the pump in this context.

INFO For all decommissioning, observe chapter *2 Safety* in this document.

10.1 Decommissioning

Longer-term decommissioning

Responsibility

- Customer specialist

Prerequisites

- Shutting down the pump is completed. See chapter *6.6 Shutdown*
- Pump is secured against being switched back on again.

1. Drain the pump with the system.
2. Clean the pump, see chapter *7 Cleaning*, page *42*
3. Switch the cleaning flow off and drain the cleaning system.
4. Heed storage conditions, see chapter *4.1 Storage*, page *26*

⇒ Longer-term decommissioning has been completed.

10.2 Dismantling

Responsibility

- Customer specialist

Prerequisites

- Make sure that no process is in operation in the area concerned during disassembly.

1. Drain the pump and all the pipeline elements leading to the pump.
2. Drain the cleaning lines and cleaning containers.
3. Disconnect the power supply.
4. Take the pump out of the pipe section, with all housings and housing connections if possible.
   → Pump is dismantled.

Copyright @ GEA Hilge
2026 - All rights reserved

10.3 Disposal

Dispose of the pump in an environmentally friendly way. Observe the statutory waste disposal regulations applicable at the place of installation.

The pump consists of the following materials:

- Metals
- Synthetic materials
- Electronic parts
- Lubricants containing oil and grease

Separate the different materials and dispose of them correctly sorted. Also observe the instructions regarding disposal in the operating manuals for the individual components.

Copyright @ GEA Hilge
2026 - All rights reserved

11 Annex

11.1 Clearance certificate

Clearance certificate

Certificate	Your specifications	
We, the undersigned, together with this clearance certificate hereby order the following pump and its accessories to be inspected/repaired:	Pump specifications Type: Pump number: Delivery date:	Reason for inspection/repair order:
The pump (please mark with a cross)	___ has not been used in harmful media. ___ came into contact with substances requiring special labelling or pollutant substances.	If known, please specify the last pumped medium:
The pump was drained carefully before shipping / provision and cleaned on the outside and inside (please mark with a cross).	___ Special precautions are not necessary during further handling.	___ The following safety precautions are necessary concerning flushing liquid, residual liquids and disposal:
We assure that the above information is correct and complete and that the shipment is carried out in accordance with the legal requirements.	Company: Street, number: Postcode, town Country Phone: Fax: E-mail:	Name (printed) Date Company stamp / signature

Copyright @ GEA Hilge 2026 - All rights reserved

11.2 Abbreviations and terms

Abbreviation	Explanation
rpm	"Unit of measurement for the speed Revolutions per minute"
bar	"Unit of measurement for the pressure All pressure data [bar] is assumed to be gauge pressure [barg] unless explicitly specified other-wise.”
C	Carbon
approx.	circa
°C	"Unit of measurement for the temperature Degree Celsius”
CIP	Cleaning in place Cleaning method
dB(A)	Sound level DN DIN nominal width
DIN	German standard DIN German Institute for Stand-ardization e.V.
DN	Nominal diameter
EPDM	“Material specification Short description according to DIN/ISO 1629 Ethylene Propylene Diene Rubber
EN	European Standard
°F	"Unit of measurement for the temperature Degrees Fahrenheit
Fe	ferrite Chemical symbol for iron
FKM	Material specification Short description according to DIN/ISO 1629 Fluorine rubber
Mechanical seal	Mechanical seal
h	Unit of measurement for time hour
hp	Horse power Performance unit
IEC	International Electrotechnical Commission International Electrotechnical Commission (valid worldwide)
IP	Protection class

Copyright @ GEA Hilge
2026 - All rights reserved

Abbreviation	Explanation
ISO	International standard of the International Organization for Standardization
C	Kelvin SI base unit of thermodynamic temperature
kg	kilogram Unit of measurement for the weight
kW	kilowatt Unit of measurement for performance
l	Unit of measurement for the volume litre
max.	maximum
mm	Unit of measurement of length millimetre
µm	Unit of measurement of length micrometre
M_{min}	Torque (Nm)
M_{max}	Torque (Nm)
m^3/h flow rate	1 m^3/h = 4.409 gpm
Nm	Unit of measurement for work Newton meter Torque specification 1 Nm = 0.737 lbft Pound-Force (lb) + Feet (ft)
NPSH	Holding pressure height (m) (Net Positive Suction Head)
SIC	Silicon carbide
SIP	Sterilisation in Place Cleaning method
SS	Molybdenum steel
AF	Indicates the size of spanners width across flats
Thou	Abbreviation for thousandth of an inch, length dimension in the Anglo-American dimensions system

Copyright @ GEA Hilge
2026 - All rights reserved

Copyright @ GEA Hilge
2026 - All rights reserved

GEA Hilge, subsidiary of GEA Tuchenhagen GmbH
Hilgestrasse 37-47
55294 Bodenheim , Germany

Phone +49 (0) 6135 7016-0

BA.06X.BYY.001 Copyright © GEA Hilge - All rights reserved - Subject to modifications.