OPERATING INSTRUCTIONS

Translation from the original language



Hygienic valves

GEA VARIVENT® valve type Y

GEA Tuchenhagen GmbH
Document number: 430BAL008451
Language: EN / Date: 2017-10

COPYRIGHT

These Operating Instructions are the English translation of the original operating instructions in the sense of the EU Machinery Directive. This document is protected by copyright. All rights reserved. The document may not, in whole or in part, be copied, reproduced, translated or reduced to an electronic medium of machine-readable form without the express permission of GEA Tuchenhagen GmbH.

LEGAL NOTICE

Word marks

The designations VARIVENT® and T.VIS® are protected trademarks of GEA Tuchenhagen GmbH.

SYMBOLS USED

Danger

Stands for an immediate danger which leads to heavy physical injuries or to the death.

Warning!

Stands for a possibly dangerous situation which leads to heavy physical injuries or to the death.

Caution!

Stands for a possibly dangerous situation which could lead to light physical injuries or to damages to property.

Hint!

Stands for an important tip whose attention is important for the designated use and function of the device.

LAYOUT INFORMATION

Bullet points and numbered list characters

Bullet points are used to separate logical contents within a section:

- Bullet point 1

  Types of bullet point 1.

- Bullet point 2

  Types of bullet point 2.

Numbered list characters are used to separate enumerations within a descriptive text:

Descriptive text with consecutive numbering:

– Numbered list point 1

– Numbered list point 2

Handling instructions

Handling instructions require you to do something. Several consecutive steps result in a handling sequence that should be run in the specified order. The handling sequence can be divided into separate steps.

Handling sequence

1. Handling sequence step 1
   - step 1,
   - step 2,
   - step 3.
2. Handling sequence step 2

The subsequent handling sequence is the expected result:

→ Result of the handling sequence.

Individual handling steps

Individual handling steps are marked thus:

– Individual work steps

TABLE OF CONTENTS

1 General Information 7
1.1 Information on the Document 7
1.1.1 Binding Character of These Operating Instructions 7
1.1.2 Notes on the Illustrations 7
1.1.3 Symbols and Highlighting 7
1.2 Manufacturer address 8
1.3 Contact 8
1.4 EU Declaration of Conformity for Machines 9
2 Safety 10
2.1 Intended use 10
2.1.1 Requirements for operation 10
2.1.2 Pressure equipment directive 10
2.1.3 ATEX directive 10
2.1.4 Improper operating conditions 10
2.2 Operator’s Duty of Care 11
2.3 Subsequent changes 11
2.4 General safety instructions and dangers 12
2.4.1 Principles for safe operation 12
2.4.2 Environmental Protection 12
2.4.3 Electrical Equipment 13
2.5 Supplementary Regulations 13
2.6 Qualification of Staff 13
2.7 Safety equipment 14
2.7.1 Signage 14
2.8 Residual dangers 15
2.9 Hazard Areas 16
3 Description 18
3.1 Design 18
3.2 Functional description 19
3.2.1 Opening and closing the valve 19
3.2.2 Actuator Function 20
3.2.3 Leakage-Proof Shut-Off 20
4 Transport and storage 22
4.1 Storage conditions 22
4.2 Transport 22
4.2.1 Scope of supply 23
5 Technical data 24
5.1 Type plate 24
5.2 Technical data 24
5.3 Cleaning connection 25
5.4 Resistance of Sealing Materials 26
5.5 Pipe ends - General table of measurements 27
5.6 Tool 29
5.7 Lubricants 29
5.8 Weights 29
6 Assembly and installation 31
6.1 Safety instructions 31
6.2 Notes on installation 31
6.3 Control head 31
6.4 Valve with Detachable Pipe Connection Elements 31
6.5 Valve with Welded Ends 32
6.6 Pneumatic connections 33
6.6.1 Air Requirement 33
6.6.2 Establishing Hose Connections 33
6.7 Electrical connection with T.VIS control top 34
7 Start-up 35
7.1 Safety instructions 35
7.2 Notes on commissioning 35
8 Operation and control 36

8.1 Safety instructions 36
9 Cleaning 37
9.1 Cleaning 37
9.1.1 Cleaning Process Examples 37
9.1.2 Cleaning effect 37
9.1.3 Cleaning the Leakage Cavity 38
9.2 Passivation 38
10 Maintenance 39
10.1 Safety instructions 39
10.2 Inspections 40
10.2.1 Product contact seals 40
10.2.2 Pneumatic connections 40
10.2.3 Electrical connections 40
10.3 Maintenance intervals 41
10.4 Prior to disassembly 41
10.5 Disassembling the Valve 41
10.5.1 Supplemental disc removal 42
10.5.2 Removing the T.VIS M-15 Control Top 43
10.5.3 Removing the T.VIS A-15 Control Top 44
10.5.4 Disconnecting the Valve from the Housing 44
10.5.5 Separating the valve from the drive 45
10.5.6 Separating the valve and the lamp 46
10.5.7 Disassembly of the valve insert. 47
10.6 Maintenance 47
10.6.1 Cleaning the Valve 47
10.6.2 Replacing the V-Ring 48
10.6.3 Lubricating Seals and Threads 50
10.7 Installation 51
10.7.1 Spring 51
10.7.2 Cleaning hood 51
10.7.3 Place the seating ring between the housings 52
10.7.4 Installing the valve into the housing 52
10.7.5 Checking assembly 52
10.7.6 Reconnect the cleaning hose 53
10.7.7 Torques for the Clamps and Clamp Connections 54
10.7.8 Valve Stroke 55
11 Alarms 57
11.1 Malfunctions and remedies 57
12 Decommissioning 58
12.1 Safety instructions 58
12.2 Disposal 58
12.2.1 General notes 58
12.2.2 Valve Actuator Disposal 58
13 Spare parts list - dual seat two-way valve Y 59
14 Appendix 72
14.1 Lists 72
14.1.1 Abbreviations and terms 72

1 General Information

1.1 Information on the Document

The present Operating Instructions are part of the user information for the product. The Operating Instructions contain all the information you need to transport, install, commission, operate and carry out maintenance for the product.

1.1.1 Binding Character of These Operating Instructions

These Operating Instructions contain the manufacturer's instructions to the operator of the product and to all persons who work on or use the product regarding the procedures to follow.

Carefully read these Operating Instructions before starting any work on or using the product. Your personal safety and the safety of the product can only be ensured if you act as described in the Operating Instructions.

Store the Operating Instructions in such a way that they are accessible to the operator and the operating staff during the entire life cycle of the product. When the location is changed or the product is sold make sure you also provide the Operating Instructions.

1.1.2 Notes on the Illustrations

The illustrations in these Operating Instructions show the product in a simplified form. The actual design of the product can differ from the illustration. For detailed views and dimensions of the product please refer to the design documents.

1.1.3 Symbols and Highlighting

In these Operating Instructions, important information is highlighted by symbols or special formatting. The following examples illustrate the most important types of highlighting.

Danger

Warning: Fatal Injuries

Failure to observe the warning can result in serious damage to health, or even death.

► The arrow identifies a precautionary measure you have to take to avoid the hazard.

Warning: Explosions

Failure to observe the warning can result in severe explosions.

► The arrow identifies a precautionary measure you have to take to avoid the hazard.

Warning!

Warning: Serious Injuries

Failure to observe the warning can result in serious damage to health.

► The arrow identifies a precautionary measure you have to take to avoid the hazard.

Caution!

Warning: Injuries

Failure to observe the warning can result in minor or moderate damage to health.

► The arrow identifies a precautionary measure you have to take to avoid the hazard.

Notice!

Warning: Damage to Property

Failure to observe the warning can result in serious damage to the component or in the vicinity of the component.

► The arrow identifies a precautionary measure you have to take to avoid the hazard.

Carry out the following steps: = Start of a set of instructions.

1. First step in a sequence of operations.
2. Second step in a sequence of operations.

   → Result of the previous operation.

→ The operation is complete, the goal has been achieved.

Hint!

Further useful information.

1.2 Manufacturer address

GEA Tuchenhagen GmbH
Am Industriepark 2-10
21514 Büchen

1.3 Contact

Tel.:+49 4155 49-0
Fax:+49 4155 49-2035

flowcomponents@gea.com
www.gea.com

Engineering for a better world.

EU Declaration of conformity within the meaning of the EC machine directive 2006/42/EC

Manufacturer: **GEA Tuchenhagen GmbH**
Am Industriepark 2-10
21514 Büchen, Germany

Hereby, we declare that the machine designated in the following

---

Designation:	Valve with acutator
Type:	VARIVENT® / ECOVENT®

---

by virtue of its design and construction and in the versions placed on the market by us, complies with the essential health and safety requirements of the following directive:

Relevant EC directives:	2006/42/EC	EC Machinery Directive
Applicable harmonized standards, in particular:	EN ISO 12100: 2010	

Remarks:

- In the event of a modification to the machine that was not agreed with us, this declaration loses its validity
- Furthermore, we declare that the specific technical documentation for this machine has been drawn up in accordance with Annex VII, Part A, and undertake to forward this documentation by means of data medium upon justified request by the national authorities

---

Person authorised for compilation and handover of technical documentation:

GEA Tuchenhagen GmbH
Am Industriepark 2-10
21514 Büchen, Germany

Büchen, 18 July 2025

Sören de Boon
Senior Vice President
Business Unit Valves & Pumps

i.V. Stephan Dirks
Senior Director Product Engineering & Development
Business Line Hygienic Valves/ BU Valves & Pumps

Engineering for a better world.

UK- Declaration of conformity by Supply of Machinery (Safety) Regulations 2008

Manufacturer: **GEA Tuchenhagen GmbH**
Am Industriepark 2-10
21514 Büchen, Germany

Hereby, we declare that the machine designated in the following

Designation:	Valve with actuator
Type:	VARIVENT® / ECOVENT®

by virtue of its design and construction and in the versions placed on the market by us, complies with the essential health and safety requirements of the following directive:

Relevant UK legislation:	Supply of Machinery (Safety) Regulations 2008
Applicable harmonized standards, in particular:	EN ISO 12100: 2010

Remarks:

- In the event of a modification to the machine that was not agreed with us, this declaration loses its validity
- Furthermore, we declare that the specific technical documentation for this machine has been drawn up in accordance with Annex VII, Part A, and undertake to forward this documentation by means of data medium upon justified request by the national authorities

GEA Importer into UK

GEA Mechanical Equipment UK Ltd.
Westfalia House
Old Wolverton Road, Old Wolverton, Milton Keynes
MK12 5PY, United Kingdom

Person authorised for compilation and handover of technical documentation:

Mike Kiely
GEA Mechanical Equipment UK Ltd.
Westfalia House
Old Wolverton Road, Old Wolverton, Milton Keynes
MK12 5PY, United Kingdom

Büchen, 23 July 2025

Sören de Boon
Senior Vice President
Business Unit Valves & Pumps

i.V. Stephan Dirks
Senior Director Product Engineering & Development
Business Line Hygienic Valves/ BU Valves & Pumps

2 Safety

2.1 Intended use

The double-seat change-over valve Y is used for switching liquid flows in pipeline systems

The medium should preferably flow in the opening direction of the valve disk to avoid pipe hammers when the valve is opened or closed.

If the valve is used in the opposite direction (valve closing), a damping cylinder can be used to avoid pressure drops.

Do not install the valve in spring-opening, as this will open when there is a current or air failure and leads to product mixing.

In a closed pipe system, hydraulic pressure build-up may occur when the valve switches and result in seal damage.

Hint!

The manufacturer will not accept any liability for damage resulting from any use of the valve which is not in accordance with the designated use of the valve. The risk of such misuse lies entirely with the operator of the facility.

2.1.1 Requirements for operation

The prerequisite for reliable and safe operation of the component is proper transportation and storage as well as professional installation and assembly. Operating the unit within the limits of its designated use also involves adhering to the operating, inspection and maintenance instructions.

2.1.2 Pressure equipment directive

The valve is a piece of pressure equipment (without safety function) as defined in the Pressure Equipment Directive: Directive 2014/68/EG. They are classified according to Annex II, article 4, section 3. In the event of any deviations, GEA Tuchenhagen GmbH will supply a specific Declaration of Conformity.

2.1.3 ATEX directive

In areas with an explosive atmosphere, only valves suitable for use in such areas may be used.

Refer to and observe the additional operating instructions “ATEX version valves”. For details regarding the marking of valves for potentially hazardous areas also refer to the additional operating instructions “ATEX version valves”.

If these valves are used in areas with a potentially explosive atmosphere, you must absolutely comply with directive 2014/34/EC with respect to all ignition hazards.

2.1.4 Improper operating conditions

The operational reliability of the valve cannot be ensured under improper operating conditions. Therefore avoid improper operating conditions.

Operating the valve is not permitted if

- Persons or objects are in the danger zone.
- Safety devices are not working or were removed.
- Malfunctions have been detected on the valve.
- Damage has been detected on the valve.
- Maintenance intervals have been exceeded.

2.2 Operator's Duty of Care

In your capacity as operator of the facility you bear a particular responsibility for the proper and safe handling of the valve in your facility. Only use the valve when it is in perfect condition to prevent danger to persons and property.

These Operating Instructions contain the information you and your staff need for the safe and reliable operation during the entire service life of the valve. Be sure to read these Operating Instructions carefully and ensure that the measures described here are observed.

The operator's duty of care includes planning the necessary safety measures and monitoring that these measures are observed. The following principles apply:

- Only allow qualified staff to work on the valve.
- The operator must authorize the staff to carry out the relevant tasks.
- Working areas and the entire environment of the valve must be neat and clean.
- The staff must wear suitable work clothing and personal protective equipment. As the operator of the facility make sure that work clothing and personal protective equipment are used.
- Instruct the staff with regard to any properties of the product which might pose a health risk and the preventative measures to be taken.
- Have a qualified first-aider on call during the operation, who can initiate the necessary first-aid measures in case of an emergency.
- Clearly define processes, lines of authority and responsibilities associated with the valve. Everybody must know what to do in case of an emergency. Instruct the staff in this respect at regular intervals.
- The signs relating to the valve must always be complete and legible. Check, clean and replace the signs as necessary at regular intervals.
- Observe the Technical Data specified and the limits of use!



Hint!

Carry out regular checks. This way you can ensure that these measures are actually observed.

2.3 Subsequent changes

You should never make any technical modifications to the valve. Otherwise you will have to undergo a new conformity process in accordance with the EC Machinery Directive on your own.

In general, only original spare parts supplied by GEA Tuchenhagen GmbH should be fitted. This ensures the reliable and economical operation of the valve.

2.4 General safety instructions and dangers

The valve is operationally reliable. It was built according to state-of-the-art science and technology.

Nevertheless, the valve can pose dangers, especially if

- the valve is not used in accordance with its intended use,
- the valve is not used correctly,
- the valve is operated under impermissible operating conditions.

2.4.1 Principles for safe operation

Dangerous situations during operation can be avoided by safety-conscious and proactive behaviour of the staff.

To ensure safe operation of the valve the following principles apply:

- The Operating Instructions must be kept ready to hand at the valve's place of use. They must be complete and in clearly legible form.
- Only use the valve for its intended use.
- The valve must be functional and in good working order. Check the condition of the valve before starting work and at regular intervals.
- Wear tight-fitting work clothing for all work on the valve.
- Ensure that nobody can get hurt on the parts of the valve.
- Immediately report any faults or noticeable changes on the valve to the person responsible.
- Never touch the pipes and the valve when these components are hot! Avoid opening the valve unless the process plants have been emptied and depressurised.
- Observe the accident prevention regulations and all local regulations.

2.4.2 Environmental Protection

Harm to the environment can be avoided by safety-conscious and proactive behaviour of the staff.

For environmental protection the following principles apply:

- Substances harmful to the environment must not be discharged into the ground or the sewage system.
- Always observe the pertinent regulations relating to waste avoidance, disposal and utilization.
- Substances harmful to the environment must be collected and stored in suitable containers. Clearly mark the containers.

- Dispose of lubricants as hazardous waste.

2.4.3 Electrical Equipment

For all work on electrical equipment, the following principles apply:

- Access to electrical equipment should only be allowed to qualified electricians. Always keep unattended switch cabinets locked.
- Modifications of the control system can affect the safe and reliable operation. Modifications are only permitted with the express permission of the manufacturer.
- After completion of all work, check that the protective devices are fully functional.

2.5 Supplementary Regulations

In addition to the instructions in this documentation the following also has to be observed:

- pertinent accident prevention regulations,
- generally accepted safety rules,
- national regulations applicable in the country of use,
- work and safety instructions applicable in the facility,
- installation and operating regulations for use in potentially explosive areas.

2.6 Qualification of Staff

This section contains information about the qualifications that staff working on the valve must have.

Operating and maintenance staff must

- have the necessary qualification to carry out their tasks,
- be instructed with regard to possible dangers,
- know and observe the safety instructions given in the documentation.

Only allow qualified electricians to carry out work on the electrical equipment or have a qualified electrician supervise the work.

Only allow specially trained staff to carry out any work on explosion-protected equipment. When working on explosion-protected equipment observe the standards DIN EN 60079-14 for gases and DIN EN 50281-1-2 for dusts.

The following minimum qualifications are required:

- Vocational training as a specialist who can work on the valve independently.
- Sufficient instruction to work on the valve under the supervision and direction of a qualified specialist.

Each member of staff must meet the following requirements to be allowed to work on the valve:

- Personal qualification for the relevant task.

- Sufficient professional qualification for the relevant task.
- Instructed with regard to the function of the valve.
- Instructed with regard to the operating sequences of the valve.
- Familiar with the safety devices and their function.
- Familiar with these Operating Instructions, especially with the safety instructions and the information which is relevant for the task on hand.
- Familiar with the basic regulations with regard to occupational health and safety and accident prevention.

For work to be carried out on the valve the following user groups are distinguished:

User groups	
Staff	**Qualifications**
Operating staff	Adequate instruction and sound knowledge in the following areas: • Function of the valve • Valve operating sequences • What to do in case of an emergency • Lines of authority and responsibilities with respect to the task
Maintenance staff	Adequate instruction as well as sound knowledge of the design and function of the valve. Sound knowledge in the following areas: • Mechanical equipment • Electrical equipment • Pneumatic system Authorization with regard to safety engineering standards to carry out the following tasks: • Setting devices into operation • Earthing of devices • Marking of devices The relevant certificates of qualification must be submitted before work can be carried out on ATEX certified machines.

2.7 Safety equipment

2.7.1 Signage

Dangerous points on the valve are indicated by warning signs, prohibition signs and mandatory signs.

The signs and notes on the valve must always be legible. Any illegible signs must be replaced immediately.

Signs on the valve	
Sign	**Meaning**
 Fig.1	General hazard warning
 Fig.2	Warning Crushing
 Fig.3	Explosive atmosphere hazard warning

2.8 Residual dangers

Dangerous situations can be avoided by safety-conscious and proactive behaviour of the staff and by wearing personal protective equipment.

Residual dangers on the valve and measures		
Danger	**Cause**	**Measure**
Danger to life	Inadvertent switch-on of the valve	Effectively disconnect all components, effectively prevent switch-on.
	Electric power	Observe the following safety rules: 1. Isolate from the power supply. 2. Take appropriate measures to prevent switch on. 3. Test absence of voltage. 4. Earthing and short-circuiting. 5. Cover or safeguard any adjacent live parts.
	Spring tension in the actuator	Danger to life caused by compression spring in the actuator. Do not open the actuator but return it to GEA Tuchenhagen for proper disposal.

Residual dangers on the valve and measures		
Danger	**Cause**	**Measure**
Danger of injury	Danger presented by moving or sharp-edged parts	The operator must exercise caution and prudence. For all work: • Wear suitable work clothing. • Never operate the machine if the cover panels are not correctly fitted. • Never open the cover panels during the operation. • Never reach into openings. As a precautionary measure, wear personal protective equipment in the vicinity of the valve: • Protective gloves • Safety shoes
Environmental damage	Operating materials with properties which are harmful to the environment	For all work: • Collect lubricants in suitable containers. • Dispose of lubricants in accordance with the pertinent regulations.

2.9 Hazard Areas

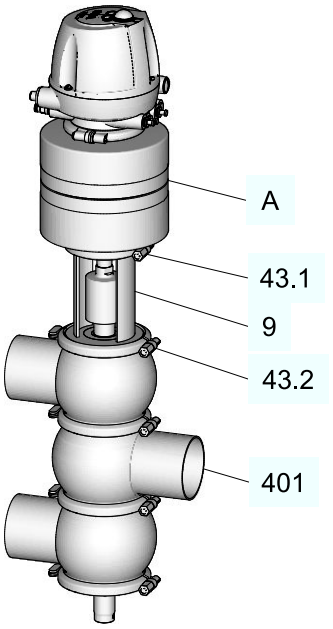

Fig.4

Please observe the following notes:

- In the event of malfunctions, shut down the valve (disconnect from the power and air supply) and secure it against being used.
- Never reach into the lantern (9) or the valve housing (401) when the valve is switching. Fingers can be crushed or cut off.

- On a spring-closing valve there is danger of injury when the clamp connections (43.1/43.2) are opened, as the released spring pretension will suddenly lift the actuator. Therefore, release the spring tension before detaching the clamp connections (43.1/43.2) by supplying the actuator (A) with compressed air.
- Before starting any service, maintenance or repair work, disconnect the valve from the power supply and secure it against inadvertently being switched back on again.
- Only allow a qualified electrician to carry out any work on the electrical power supply.
- Check the electrical equipment of the valve at regular intervals. Immediately remedy loose connections and molten cables.
- If work on live parts cannot be avoided, call in a second person, who can operate the main switch in case of an emergency.
- The housing sockets have very sharp edges. When transporting and assembling the valve be sure to wear suitable protective gloves.
- When the valve switches, when the valve seat is being cleaned or if a seal is defective, cleaning medium exits from the leakage outlet of the rinsing valve. Collect this liquid in a suitable container such as a funnel or a drip pan and discharge it in a safe manner. Observe the instructions in the safety data sheets issued by the cleaning agent manufacturers.

3 Description

3.1 Design

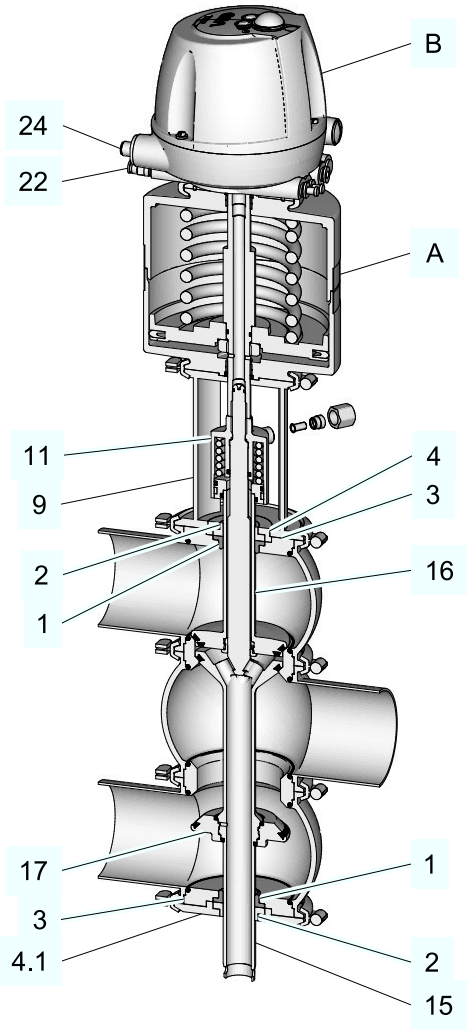

Fig.5

Design			
No.	**Designation**	**No.**	**Designation**
A	Actuator	11	Cleaning hood
B	T.VIS control top	15	Valve disk
1	Seal	16	Double-disk
2	Bearing	17	Additional disc
3	Sealing disk	22	Air connection
4	Bearing disk	24	Electrical connection
9	Lantern		

3.2 Functional description

3.2.1 Opening and closing the valve

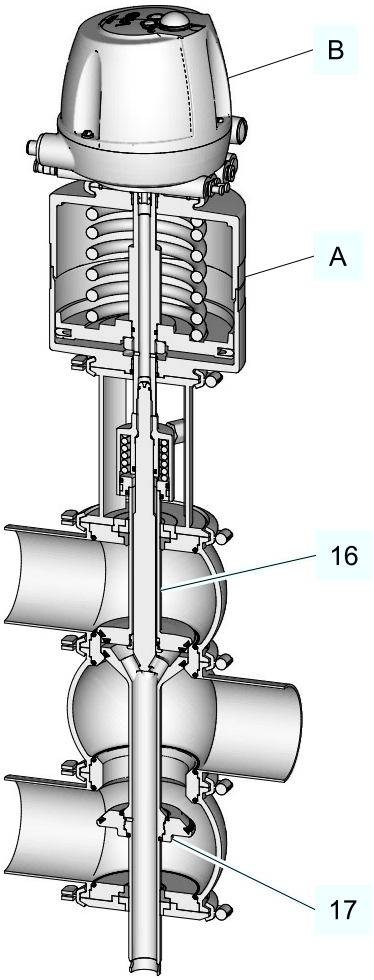

Fig.6

Opening of valve

In the closed setting, the upper and lower housings are sealed by a double-seated disc (16). Throttle gaps limit the leakage in case of seal defects, even on both seals. The additional disc (17) is opened. The valve is enacted by air pressure through the air connection. The piston of the actuation cylinder presses up against the spring. The actuated lower valve disc is pulled up in a few-millimetres stroke and the cavity between the upper and lower valve discs is blocked by the upper disc orientation, using the middle seals to block against the product space.

The valve disc combination moves up into the final position and opens the valve. With the same motion, the additional disc (17) is pulled up and blocks both lower housings off.

Closing the valve

The closing process happens in the opposite sequence, therefore the upper valve seals are first seated before the lower valve seals leave the middle seal and the lower disc closes. With the downward motion of the valve rod, the additional disc is opened again.

3.2.2 Actuator Function

The actuator is of the spring-closing type (Z). The valve is closed in the non-actuated position.

Identification on the T.VIS control top once the installation (SET-UP) has been completed:

- Green steady light (1): valve in non-actuated position
- Yellow steady light (1): valve in end position (actuated position)

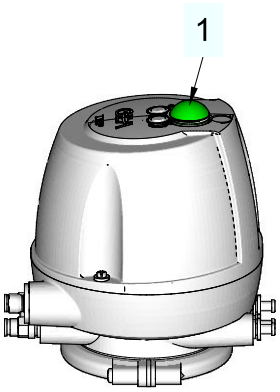

Fig.7

3.2.3 Leakage-Proof Shut-Off

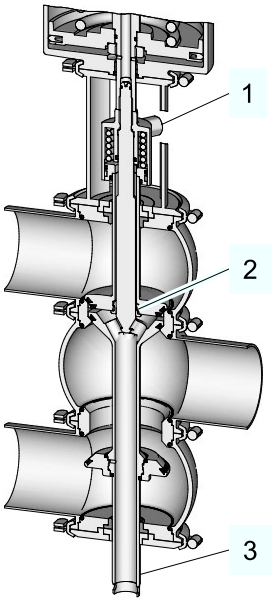

Fig.8

The upper and the lower valve housing are each equipped with a valve seat. The chamber between the two valve disks is connected to the open environment by an isolation outlet (3) integrated into the lower valve stem. In the event of seal damage, the leaking fluid can safely flow into the open. Defective seals can thus easily be detected. Under normal operating conditions, liquid from one pipe is prevented from entering the other pipe.

The cleaning of the leakage drain system occurs independently from the opening and closing of the valve.

A cleaning liquid is supplied to the leakage drain system via a separate connection (1) arranged in the lantern. The cleaning fluid is sprayed into a cavity between both of the valve discs over a ring nozzle (2) and flows out through a drain free of pressure.

The cleaning fluid flows out of a CIP-cleaning unit.

Cleaning fluid data

- Service pressure: min. 2 bar (29 psi), max. 5 bar (72.5 psi)
- Service temperature: max. 135 °C (275 °F)

4 Transport and storage

4.1 Storage conditions

The valves, valve inserts or spare parts should be stored in a dry place, free of vibrations and dust, and protected from light. To avoid damage, leave the components in their original packaging if possible.

If, during transport or storage, the valve is going to be exposed to temperatures ≤ 0°C, it must be dried beforehand and suitable measures must be taken to protect it from damage.

Hint!

We recommend that the valve should be stored at a temperature of ≥ 5 °C for a period of 24 hours prior to any handling (disassembling the housings / activation of actuators) so that any ice crystals formed by condensation water can melt.

4.2 Transport

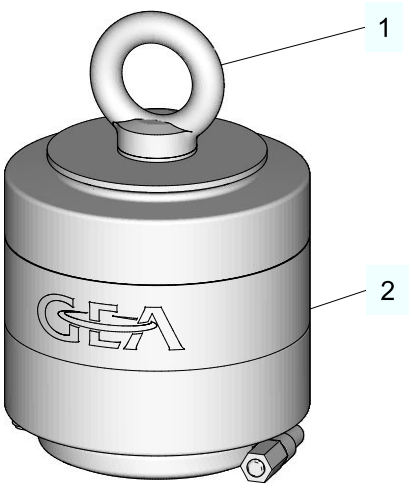

Fig.9

For transport, the following principles apply:

- When transporting the valve be sure to unscrew the control top and the switch bar from the actuator (2) and use the screwed-in eye bolt (1), material no. 221-104.98, to lift the valve.
- Only use suitable lifting gear and slings for transporting the package units/ valves.
- Observe the pictograms on the package.
- Handle valves with care to avoid damage caused by impact or careless loading and unloading. The outside synthetic materials are susceptible to breaking.
- Control tops must be protected from animal and vegetable fats.
- Only allow qualified staff to transport the valve.
- Movable parts must be properly secured.

- Only use approved, fully functional load lifting devices and lifting accessories which are suitable for the intended purpose. Observe the maximum load-bearing capacities.
- Secure the valve against slipping. Take the weight of the valve into account and the position of the point of gravity.
- Under no circumstances should anyone stand under a suspended load.
- Take care when transporting the valve. Do not grip sensitive parts of the unit to lift or push the unit or to support yourself. Avoid putting the unit down with a jerk.

4.2.1 Scope of supply

On receipt of the valve check whether

- the details on the type plate correspond to the data in the order and delivery documents,
- the equipment is complete and all components are in good order.

5 Technical data

5.1 Type plate

The type plate clearly identifies the valve.

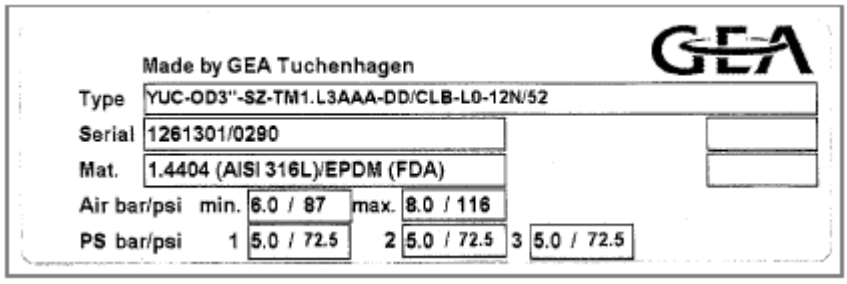

Fig.10

The type plate provides the following key data:

Key data of the valve	
Type	Dual seat two-way valve Y
Serial	Serial number
Material	1.4404 (AISI316L)/EPDM (FDA)
Control air pressure bar/psi	min. 6.0 (87); max. 8.0 (116)
Product pressure bar/psi	5.0 (72.5)

5.2 Technical data

Refer to the following tables for the key technical data of the valve:

Technical data: Valve	
Designation	**Description**
Size	DN 25 to DN 150 1" to 4" OD 2" to 6" IPS
Material of product contact parts	Stainless steel 1.4404
Installation position	Vertical

Technical data: Ambient temperatures	
Designation	**Description**
- Valve	0 to 45 °C (32 ... 113 °F), standard < 0 °C (32 °F): use control air with a low dew point. Protect valve stems against freezing.
- Proximity switch	-20 to +80 °C (-4 ... +176 °F)
- Control top type T.VIS M-15, A-15	-20 to +50 °C (-4 ... +122 °F)

Technical data: Ambient temperatures	
Designation	**Description**
- Control top type T.VIS P-15	0 to +50 °C (-4 ... +122 °F)
Product temperature and operating temperature	Depending on the sealing material

Technical data: Compressed air supply	
Designation	**Description**
Air hose	
- Metric	Material PE-LD Outer-Ø 6 mm Inner-Ø 4 mm
- Inch	Material PA Outer-Ø 6.35 mm Inner-Ø 4.3 mm
Product pressure	5 bar (72.5 psi); max. 10 bar (116 psi)
Control air pressure	6 bar max. 8 bar
Control air	acc. to ISO 8573-1
- Solid particle content:	Quality class 6 Part size. max. 5mm Part density max. 5 mg/m3
- Water content:	Quality class 4 max. dew point +3 °C If the unit is used at higher altitudes or at low ambient temperatures, the dew point must be adapted accordingly.
- Oil content:	Quality class 3, preferably oil free max. 1 mg oil in $1m^3$ air

5.3 Cleaning connection

Connection for the hose	
1 ", DN 25	Ø6/4 mm
DN 40...100	Ø8/6 mm
1,5"...4" OD; 2"...4" IPS	Ø8/6 mm
DN 125, 150; 6" IPS; 6" OD	Ø10/8 mm

Service pressure for the optimal cleaning

- min. 2 bar (29 psi)
- max. 5 bar (72.5 psi)

The duration of the rinsing operation via the rinsing valve depends on the type of soiling and typically ranges between 10 and 60 seconds.

The durability of the components of the cleaning connection (sealing disc, support sleeve, PTFE hose) is dependent on the style, pressure and temperature of the required medium.

Durability of the cleaning connection				
Medium	**Max pressure**		**Temperature**	
	[bar]	**[psi]**	**[°C]**	**[°F]**
Water	6	87	95	203
5% Nitric Acid	6	87	60	140
3% Sulfuric Acid	6	87	60	140
5% Nitric Acid	6	87	85	185
Steam	3	42	130	266

5.4 Resistance of Sealing Materials

The resistance of sealing materials depends on the type and temperature of the medium conveyed. The exposure time can adversely affect the service life of the seals. The sealing materials comply with the regulations of FDA 21 CFR 177.2600 or FDA 21 CFR 177.1550.

Resistance:

- + = good resistance
- o = reduced resistance
- - = no resistance

Sealing resistance table				
Medium	**Temperature**	**Gasket material (general operating temperature)**		
		EPDM -40...+135°C (-40...275°F)	**FKM -10...+200 °C (+14...+392°F)**	**HNBR -25...+140 °C (-13...+284°F)**
Caustics up to 3%	up to 80 °C (176°F)	+	o	+
Caustics up to 5%	up to 40 °C (104°F)	+	o	o
Caustics up to 5%	up to 80 °C (176°F)	+	–	–
Caustics at more than 5%		o	–	–
Inorganic acids up to 3%	up to 80 °C (176°F)	+	+	+

Sealing resistance table				
Medium	**Temperature**	**Gasket material (general operating temperature)**		
		EPDM -40...+135°C (-40...275°F)	**FKM -10...+200 °C (+14...+392°F)**	**HNBR -25...+140 °C (-13...+284°F)**
Inorganic acids up to 5%	up to 80 °C (176°F)	o	+	o
Inorganic acids up to 5%	up to 100 °C (212°F)	–	+	–
Water	up to 80 °C (176°F)	+	+	+
Steam	up to 135 °C (275°F)	+	o	o
Steam, approx. 30 min	up to 150 °C (302°F)	+	o	–
Fuels/hydrocarbons		–	+	+
Product with a fat content of max. 35%		+	+	+
Product with a fat content of more than 35%		–	+	+
Oils		–	+	+

* Depending on the installation conditions

5.5 Pipe ends - General table of measurements

Hint!

Not every valve is available in every size. Particulars of available sizes of valves see Chapter 5, Page 24.

Dimensions for Pipes in DN				
Metric DN	**Outside diameter**	**Wall thickness**	**Inside diameter**	**Outside diameter acc. to DIN 11850**
15	19	1.5	16	x
20	23	1.5	20	x
25	29	1.5	26	x
40	41	1.5	38	x
50	53	1.5	50	x
65	70	2.0	66	x

Dimensions for Pipes in DN				
Metric DN	**Outside diameter**	**Wall thickness**	**Inside diameter**	**Outside diameter acc. to DIN 11850**
80	85	2.0	81	x
100	104	2.0	100	x
125	129	2.0	125	x
150	154	2.0	150	x

Dimensions for Pipes in Inch OD				
Inch OD	**Outside diameter**	**Wall thickness**	**Inside diameter**	**Outside diameter acc. to BS 4825**
0.5"	12.7	1.65	9.4	x
0.75"	19.05	1.65	15.75	x
1"	25.4	1.65	22.1	x
1.5"	38.1	1.65	34.8	x
2"	50.8	1.65	47.5	x
2.5"	63.5	1.65	60.2	x
3"	76.2	1.65	72.9	x
4"	101.6	2.11	97.38	x
6"	152.4	2.77	146.86	x

Dimensions for Pipes in Inch IPS				
Inch IPS	**Outside diameter**	**Wall thickness**	**Inside diameter**	**Outside diameter according to DIN EN ISO 1127**
2"	60.3	2	56.3	x
3"	88.9	2.3	84.3	x
4"	114.3	2.3	109.7	x
6"	168.3	2.77	162.76	x

5.6 Tool

Tool	Material no.
Hose cutter	407-065
Manual emergency actuator	221-310.74
Belt wrench	408-142
V-ring insertion tool	229-109.88
Open end spanner, ends ground, a/f 17-19	229-119.01
Open end spanner, ends ground, a/f 21-23	229-119.05
Open end spanner, ends ground, a/f 22-24	229-119.03
Open end spanner, a/f 30-32	408-041
Assembly tool DN 40-50 DN 65-100 DN 125/162	 229-109.89 229-109.90 229-109.91
Mounting tool supplemental disc DN 50/40 DN 80/65 DN 100 DN 125+150 / 6" IPS	 229-109.10 229-109.12 229-109.15 229-109.21

5.7 Lubricants

Lubricants	Material no.
Rivolta F.L.G. MD-2	413-071
PARALIQ GTE 703	413-064

5.8 Weights

Size	Weight [kg]
DN 25	9
DN 40	14
DN 50	14
DN 65	24
DN 80	25
DN 100	34
DN 125	67
DN 150	85
OD 1"	9
OD 1.5"	13

Size	Weight [kg]
OD 2"	14
OD 2.5"	23
OD 3"	24
OD 4"	34
OD 6"	85
IPS 2"	15
IPS 3"	24
IPS 4"	36
IPS 6"	86

6 Assembly and installation

6.1 Safety instructions

Dangerous situations during assembly can be avoided by safety-conscious and proactive behaviour of the staff.

For installation, the following principles apply:

- Only properly qualified staff is allowed to install, assemble and set the valve into operation.
- Ensure that adequate working and traffic areas are available at the place of installation.
- Observe the maximum load-bearing capacity of the installation surface.
- Observe the transport instructions and markings on the part(s) to be transported.
- Remove any nails protruding from transport crates immediately after opening the crate.
- Under no circumstances should anyone stand under a suspended load.
- During assembly, the valve safety devices might not be working effectively.
- Reliably secure sections of the plant which have already been connected against inadvertently being switched on.

6.2 Notes on installation

The installation position of the valve is upright. Care must be taken to ensure that the valve housing and the pipe system can drain properly.

To prevent damage, make sure that

- the valve is installed in the pipe system free of tension and
- no foreign materials (e.g. tools, bolts, lubricants) are left in the system.

6.3 Control head

If external valves are connected in a control top with several solenoid valves, make sure that the control air pressure in the main actuator does not fall below the operating pressure.

6.4 Valve with Detachable Pipe Connection Elements

This section describes the procedure to fit the valve.

⚠ Caution!

Liquids in pipes

Danger of injury due to liquid spraying out

► Therefore, before releasing any pipe connections or hinged clamps: drain the pipe and, if necessary, clean or rinse it.
► Separate the pipe section in which the valve is to be fitted from the rest of the piping system to prevent product entering again.

Carry out the following steps:

1. Fit valves with detachable pipe connection elements – using suitable connection fittings – directly into the pipe system.

→ Valve is installed.

6.5 Valve with Welded Ends

This section describes the welding procedure for the valve housing.

⚠ Warning!

Spring tension in the valve

Danger of injury when opening the clamp connections on the actuator or on the housing as the released spring pretension will suddenly lift the actuator.

► Therefore, release the spring tension before detaching the clamp connections by pressurizing the actuator with compressed air at max. 8 bar.

Notice!

Seals are wearing parts

Old seals will cause malfunction of the valve

► When fitting the valve be sure to fit new housing O-rings.

Carry out the following steps:

1. Release the spring tension.
2. Remove the valve insert, see chapter Section 10.5, Page 41.
3. Weld the housing, without sealing rings, into position, ensuring that the connection is free of stress.
4. Fit the housing into place and tack it.
5. To avoid welding distortions, always seal the housing before welding.
6. Flush the housing with forming gas from the inside to push the oxygen out of the system.
7. Weld the housing into the pipe system; use welding filler if necessary. When technically possible, use the WIG-Orbital welding process with pulse configuration, according to guidelines EHEDG documentation. 35.
8. Passivate the seam after welding.
9. Assemble the valve and depressurize the actuator..
10. Fit the seals.

    → The valve disk is lowered.

→ Install the valve with welded ends.

Hint!

Welding method: We recommend using the automatic orbital welding method. All welding work should only be performed by certified welders or machine operators (orbital welders).

Housing O-rings: When assembling the valve always replace the housing O-rings to ensure that the valve is tight.

6.6 Pneumatic connections

6.6.1 Air Requirement

Actuator type	Actuator diameter [mm]	Air requirement (dm^3_n/ Stroke) dm^3n at 1.01325 bar, at 0°C according to DIN 1343
A...	99	0.16
B...	109	0.26
B...5	109	0.34
C...	135	0.42
C...5	135	0.54
D...	170	0.70
E...	210	1.10
E...5	210	1.40
E...6	210	2.00
S...6	261	3.20
D...6	170	1.30
R...[1]	170	1.60
S...[1]	210	2.00
T...[1]	210	3.10
T...6[1]	210	4.00
U...6[1]	261	5.10
[1]Actuators with booster cylinder for increasing the pneumatic actuating force when lower control air pressures are used		

6.6.2 Establishing Hose Connections

To ensure reliable operation, the compressed air hoses must be cut exactly square.

Tools required:

- A hose cutter

Carry out the following steps:

1. Shut off the compressed air supply.
2. Use the hose cutter to cut the pneumatic hoses square.
3. Push the air hose into the air connector on the control top.
4. Re-open the compressed air supply.

→ Establish a hose connection.

6.7 Electrical connection with T.VIS control top

Danger

Live parts

Electrical shock can result in serious personal injury or death.

► Only allow properly qualified staff to carry out work on the electrical equipment.
► Prior to establishing electrical connections check the maximum permissible operating voltage.

Explosive gases or dusts

An explosion can result in serious personal injury or death.

► Observe the installation and operating regulations for use in potentially explosive areas.

Carry out the following steps:

1. Connect in accordance with the connection diagram and the instructions in the corresponding operating instructions for control tops T.VIS M-15, A-15 or T.VIS P-15.

→ Done

Hint!

The proximity switches are factory set. During transport and installation it can happen that the settings are changed, so that readjustment may be required (see the Operating Instructions for the control top).

7 Start-up

7.1 Safety instructions

Initial commissioning

For initial commissioning, the following principles apply:

- Take protective measures against dangerous contact voltages in accordance with pertinent regulations.
- The valve must be completely assembled and correctly adjusted. All screw connections must be securely tightened. All electrical cables must be installed correctly.
- Reliably secure machine parts which have already been connected against inadvertently being switched on.
- Relubricate all lubricating points.
- Make sure lubricants are used properly.
- After conversion of the valve, residual risks must be reassessed.

Setting into Operation

For commissioning, the following principles apply:

- Only allow properly qualified staff to set the valve into operation.
- Establish all connections correctly.
- The safety devices for the valve must be complete, fully functional and in perfect condition. Check the function before starting any work.
- When the valve is switched on, the danger zones must be free.
- Remove any liquids that have escaped without leaving residues.

7.2 Notes on commissioning

Before starting commissioning observe the following:

- Make sure that there are no foreign materials in the system.
- Actuate the valve once by applying compressed air.
- Clean the pipe system prior to the first product run.
- During commissioning, regularly check all sealing points for leaks. Replace defective seals.

8 Operation and control

8.1 Safety instructions

Dangerous situations during operation can be avoided by safety-conscious and proactive behaviour of the staff.

For operation, the following principles apply:

- Monitor the valve during the operation.
- Safety devices must not be changed, removed or taken out of service. Check all safety devices at regular intervals.
- All guards and hoods must be fitted as intended.
- The place of installation of the valve must be adequately ventilated at all times.
- Structural alterations of the valve are not permitted. Immediately report any changes on the valve to the person responsible.
- Always keep danger zones clear. Do not leave any objects in the danger zone. Only allow persons to enter the danger zone when the machine is de-energized.
- Regularly check that all emergency stop devices are working correctly.

9 Cleaning

9.1 Cleaning

All parts in contact with product must be cleaned at regular intervals. Always observe the safety data sheets issued by the cleaning agent manufacturers. Only use cleaning agents which do not cause damage to the seals and the inner parts of the valve. When the pipe is cleaned, the cleaning medium also flows through and cleans the valve housings.

With respect to the cleaning method and parameters like detergents, temperatures, times, and intervals, the component manufacturer can merely make recommendations but cannot provide any generally applicable details. Method and parameters should be determined and defined by the operator in accordance with the relevant process and product.

The cleaning effect must be checked regularly by the operator!

9.1.1 Cleaning Process Examples

Typical Cleaning Parameters in Dairy Operations

Example of a two-phase cleaning process:

- Sodium hydroxide solution and sodium hydroxide based combination products in concentrations from 0.5% to 2.5% at 75 °C (167 °F) to 80 °C (176 °F).
- Phosphoric or nitric acid, and combination products based thereon in the concentrations of 0.3 to 1.5% at approx. 65 °C (149 °F).

Example of a cleaning operation in one cleaning step:

- Formic acid and formic acid-based combination products at up to 85 °C (185 °F).

Typical Cleaning Parameters in Breweries

- Sodium hydroxide solution and sodium hydroxide based combination products in concentrations of 1% to 4% at about 85 °C (185 °F).
- Phosphoric or nitric acid, and combination products based thereon in the concentrations of 0.3 to 1.5% at 20 °C (68 °F).

9.1.2 Cleaning effect

The cleaning effect depends on the following factors:

- Temperature
- Time
- Mechanics
- Chemicals
- Degree of soiling

These factors can be combined in such a way as to make an optimal cleaning result probable.

9.1.3 Cleaning the Leakage Cavity

In the case of double seated valves without a lift drive, the leakage chamber is cleaned by means of a spray nozzle in the double disc, which is connected to a valve seat cleaning line.

Here, there can only be general recommendations made as to how many and the length of the spray cleaning, which are all dependent on the conditions occurring at each facility, such as type of products, temperatures, cleaning means, cleaning intervals, etc., which could require more frequent or longer spray cleanings.

It is recommended to set the cleaning conditions in the system in a test phase, in order to save cleaning medium. To optimize the seating cleaning, check the valve after performing the cleaning to see if the valve is clean.

All appropriate systems for cleaning the valve should be regularly used to that an optimal cleanliness is ensured and any damage to the valve is prevented.

Double seated valve with spray cleaning

The spray cleaner cleans the leakage cavity, while product flow can flow in both lines, using a spray nozzle that distributes the CIP fluid throughout the leakage cavity. However, the seal surfaces of the valve disc seals are not cleaned with them.

This type of leakage cavity cleaning should occur frequently with liquids which are easily flushable, which do not stick to the seal surfaces or which eventually crystallise.

Technical data of the spray cleaning

The service pressure of the cleaning fluid should be 2.5 ±0.5 bar (35.6...7 psi) and the service temperature should be: max. 135 °C (275 °F).

The duration of the entire washing process depends on the type of soiling and typically ranges between 10 and 90 seconds.

Depending on the cleaning method (medium, concentration, temperature and contact times), the seals are affected to different degrees. This can impair the function and the service life.

9.2 Passivation

Before commissioning a plant, passivation is commonly carried out for long pipes and tanks.

Valve blocks are usually excepted from this. Passivation is typically performed using nitric acid (HNO_3) at approx. 80 °C (176 °F) at a concentration of 3 % and a contact time of 6 to 8 hours.

10 Maintenance

10.1 Safety instructions

Maintenance and repair

Before starting any maintenance and repair work on the electrical devices of the valve, carry out the following steps in accordance with the "5 safety rules":

- Isolate from the power supply
- Take appropriate measures to prevent switch on
- Test absence of voltage
- Earthing and short-circuiting
- Cover or safeguard any adjacent live parts.

For maintenance and repair, the following principles apply:

- Observe the intervals specified in the maintenance schedule.
- Only allow qualified staff to carry out maintenance or repair work on the valve.
- Before starting any maintenance or repair work, the valve must be switched off and secured against being switched back on. Work may only be started once any residual energy has been discharged.
- Block access for unauthorized persons. Put up notice signs which draw attention to the maintenance or repair work going on.
- Do not climb on the valve. Use suitable access aids and working platforms.
- Wear suitable protective clothing.
- Only use suitable and undamaged tools to carry out maintenance work.
- When replacing parts only use approved, fully functional load lifting devices and lifting accessories which are suitable for the intended purpose.
- Before setting the magnetic separator back into operation, refit all safety devices as originally provided in the factory. Then check that all safety devices are working correctly.
- Make sure lubricants are used properly.
- Check pipes are firmly secured, also check for leaks and damage.
- Check that all emergency stop devices are working correctly.

Disassembly

For disassembly, the following principles apply:

- Only allow qualified staff to disassemble the valve.
- Before starting disassembly, the valve must be switched off and secured against being switched back on. Work may only be started once any residual energy has been discharged.
- Disconnect all power and utility lines.
- Markings, e.g. on lines, must not be removed.

- Do not climb on the valve. Use suitable access aids and working platforms.
- Mark the lines (if unmarked) prior to disassembly to ensure they are not confused when re-assembling.
- Protect open line ends with blind plugs against ingress of dirt.
- Pack sensitive parts separately.
- For longer periods of standstill, observe the storage conditions, see Section 4.1, Page 22.

10.2 Inspections

Between the maintenance periods, the valves must be checked for leakage and proper function.

10.2.1 Product contact seals

Carry out the following steps:

1. Regularly check:
   - Stem seal between upper housing and lantern
   - V-ring in the valve disks
   - O-rings between the valve housings

→ Done

10.2.2 Pneumatic connections

Carry out the following steps:

1. Check the operating pressure at the pressure reducing and filter station.
2. Regularly clean the air filter in the filter station.
3. Check that the air hoses sit firmly in the air connections.
4. Check the lines for kinks and leaks.
5. Check the solenoid valves for proper function.

→ Done

10.2.3 Electrical connections

Carry out the following steps:

1. Check that the union nut on the cable gland is tight
2. Check that the cable connections are firmly secured.
3. Check the solenoid valves for proper function.
4. Check that the proximity switch connections are clean.

→ Done

Hint!

The electrical cable must be long enough to allow the control top to be removed via the switch bar.

10.3 Maintenance intervals

To ensure the highest operational reliability of the magnetic separator, all wearing parts should be replaced at longer intervals.

The actual maintenance intervals can only be determined by the user since they depend on the operating conditions, for instance:

- daily period of use,
- switching frequency,
- type and temperature of the product,
- type and temperature of the cleaning solution,
- ambient conditions.

Maintenance intervals	
Applications	**Maintenance intervals (guideline values)**
Media at temperatures of 60 °C to 130 °C (140 °F to 266 °F)	approx. every 3 months
Media at temperatures of < 60 °C (< 140 °F)	approx. every 12 months

10.4 Prior to disassembly

Prerequisite:

- Make sure that during maintenance and repair work no process is in operation in the area concerned.

Carry out the following steps:

1. Drain all pipe system elements that lead to the valve and, if necessary, clean or rinse them.
2. Shut off the control air supply.
3. Disconnect the power supply.
4. Take the valve out of the pipe section, with all housings and housing connections if possible.

→ Done

10.5 Disassembling the Valve

10.5.1 Supplemental disc removal

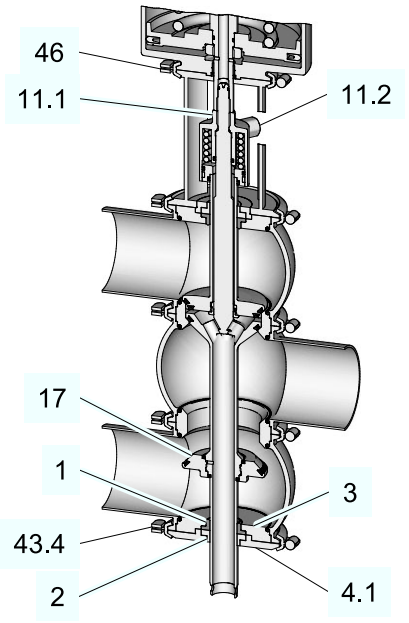

Fig.11

Hint!

For constructed size DN 25 / 1”OD any separate disassembly of the supplemental disc should be noted, see section “disassembly of the supplemental disc - constructed size DN 25 / 1”OD” Page 42.

Carry out the following steps:

1. Remove the cleaning connection (11.2).
2. Detach the clamp connection (43.4) on the lower valve housing.
3. Remove the seal (1), seal washer (3), bearing (2), bearing washer (4.1) from the lower housing.
4. Hold the cleaning hood (11) on the key area (11.1) and unscrew the supplemental disc (17) with the mounting tool.

→ Done

Disassembly of the supplemental disc - Constructed size DN 25 / 1”OD

1. Remove the cleaning connection (11.2).
2. Detach the clamp connection (43.4) on the lower valve housing.

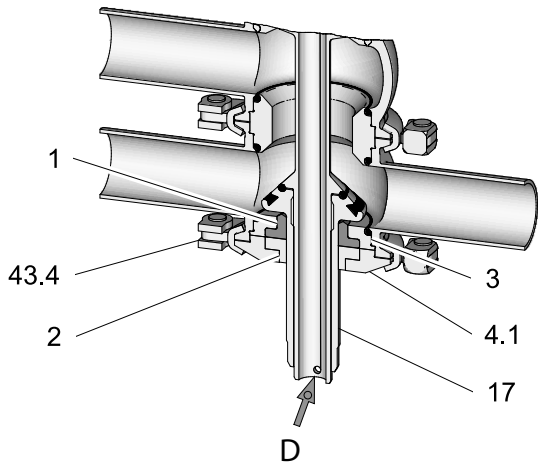

Fig.12

3. Remove the seal (1), seal washer (3), bearing (2), bearing washer (4.1) from the lower housing.
4. Secure the valve disc with the arbour (D) Ø 3 mm.
5. Loosen the supplemental disc (17) with a spanner SW 19.
6. Remove the arbor (D).
7. Unscrew the supplemental disc (17).

→ Done

10.5.2 Removing the T.VIS M-15 Control Top

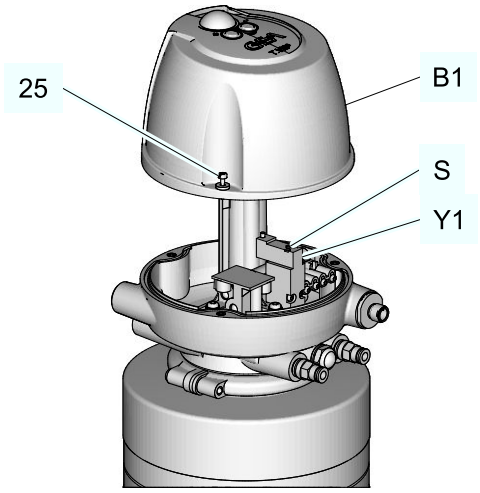

Fig.13

Prerequisite:

- No solenoid valve must be actuated electrically or manually.
- The pneumatic and electrical connections on the plant side can remain on the control top.

⚠ Caution!

The permanent magnet on the switch bar is fragile.

Damage to the permanent magnet.

► Protect the permanent magnet against impact stress.

⚠ Warning!

Spring tension in the valve

Danger of injury when detaching the clamp connection (43.1, 46) as the released spring pretension will suddenly lift the actuator.

► Therefore, release the spring tension before detaching the clamp connections by pressurizing the actuator with compressed air at max. 8 bar.

Carry out the following steps:

1. Release three cheese head screws (25) and take off the cap (B1).
2. Depressurise the actuator by deactivating the solenoid valve Y1 at the manual operation element S.

   → The valve disc should be lifted.
3. Remove the clamp connection (43.1).
4. Depressurise the actuator by deactivating the solenoid valve (Y1).
5. Using a size 3 hex. key release the two screws (B11) and remove the semi-annular clamps (B12).
6. Pull off the control top (B1) upwards.

   → Light-emitting diode A (green) will go out and light-emitting diode B will flash yellow.

→ Done

10.5.3 Removing the T.VIS A-15 Control Top

For disassembly of the valve with the T.VIS A-15 Control top, see the service instructions of the control top T.VIS A-15.

10.5.4 Disconnecting the Valve from the Housing

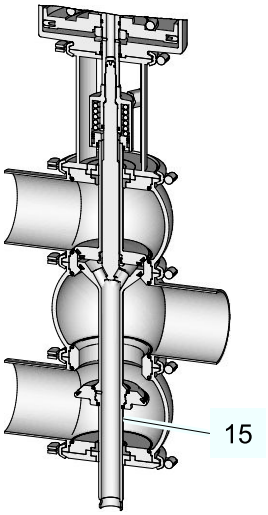

Fig.14

Notice!

The shaft of the valve disc (15) is a sensitive component.

Damage to this part can result in malfunctions.

► When the shaft of the valve disc (15) is pulled out, the stem of the valve disc must not hit the valve housing.

Carry out the following steps:

1. Carefully draw the valve out of the housing.

→ Done

10.5.5 Separating the valve from the drive

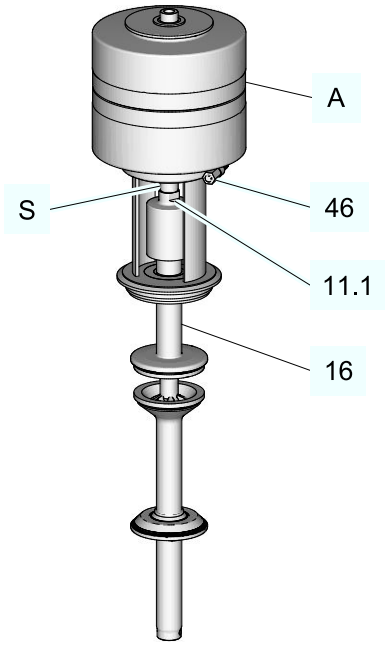

Fig.15

Notice!

The piston rod (S) and the shaft (16) of the valve disc are precision areas.

Damage to these parts can result in a malfunction.

► Secure the lamp when unscrewing the drive.

Carry out the following steps:

1. Remove the clamp connection (46) between drive and lamp.
2. Secure drive (A) with a band wrench.
3. Place the spanner onto the spanner surface of the cleaning hood (11.1) and remove the drive

→ Done

10.5.6 Separating the valve and the lamp

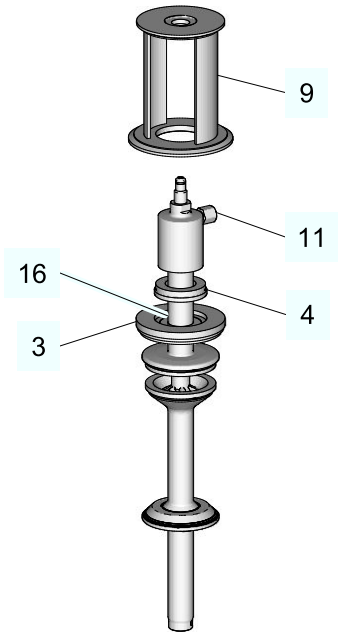

Fig.16

Notice!

The lamp (9) and the shaft (16) of the double disc are precision areas.

Damage to these parts can result in a malfunction.

► The bearing disc (4) and the sealing disc (3) must not hit the shaft (16) of the double disc when the valve insert is withdrawn.
► Do not hit the threads of the cleaning hood (11) on the lamp. Carefully remove the valve insert out of the lamp (9).

Carry out the following steps:

1. Pull the valve insert out of the lamp (9).

→ Done

10.5.7 Disassembly of the valve insert.

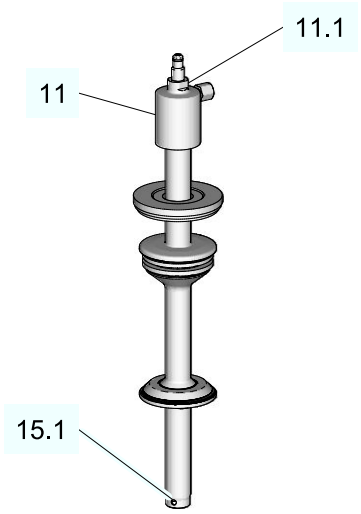

Fig.17

Carry out the following steps:

1. Secure the valve disc on the borehole (15.1) with the appropriate tool, for example a pin Ø 5 mm.
2. Place the spanner onto the spanner surface of the cleaning hood (11.1) and remove the valve disc.
3. Unscrew the cleaning hood (11) from the valve disc.
4. Remove spring (18), abutment (12), bearing washer (4), bearings (2), seal (3) with the seal washer (1) and double disc (16) from the valve disc.

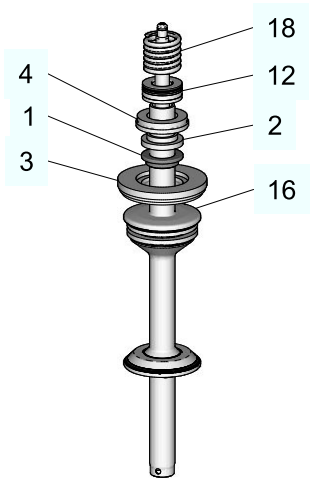

Fig.18

→ Done

10.6 Maintenance

10.6.1 Cleaning the Valve

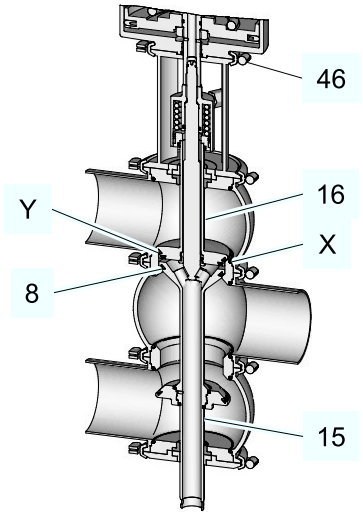

Fig.19

Notice!

The stem of the valve disk (15,16), the housing seat (X), the valve insert (Y) and the V-ring groove (8) are precision parts.

Damage to these parts can result in a malfunction.

► Handle the valve with care!

Notice!

Damage to the valve

Damage to these parts can result in a malfunction.

► Observe the safety information sheets issued by the detergent manufacturers!

► Only use detergents which are non-abrasive and not aggressive towards stainless steel.

► Use only cleaning mediums which do not damage the materials of the control top (PPE, PA).

Carry out the following steps:

1. Valve disassembly, see “Valve disassembly” (Section 10.5, Page 41)
2. Carefully clean the individual parts.

→ Done

10.6.2 Replacing the V-Ring

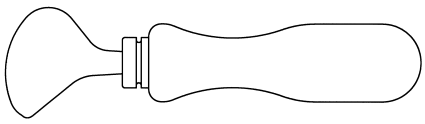

Fig.20: V-ring insertion tool

Prerequisite:

- Insert V-Ring without grease. To facilitate fitting, use water with a drop of washing-up liquid to remove the surface tension. In order that no rust is transferred, the washing-up liquid solution must be made up in a ceramic, plastic, or stainless steel container.

Tools required:

- V-ring insertion tool

⚠ Caution!

Danger of injury!

The scriber can slip off when the V-ring is removed

► Grip the valve disk in a vice with protected jaws.
► Unscrew the curved side of the scriber.

Carry out the following steps:

1. Put a scriber into the V-ring and take it out.

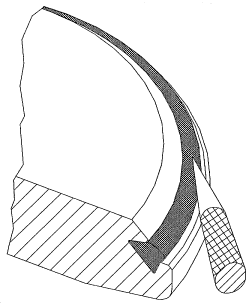

Fig.21

2. Before fitting, wet the V-ring on the side not in contact with product (rear side). Pay attention that water does not drip into the V-ring groove on the valve disk.
3. Air out the valve upon connection (22).
4. Put in the V-ring. Make sure the installation position of the V-ring is correct (see illustration).

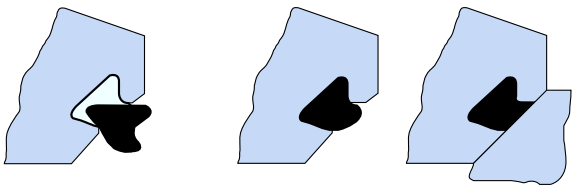

Fig.22

5. Use the insertion tool to press in the V-ring – evenly press in at several opposite points along the circumference.

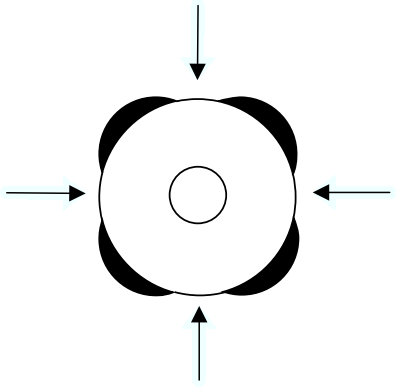

Fig.23

6. Insert the V-ring evenly.
7. Replace all the other seals identified in the spare parts lists.

→ Done

Hint!

Used seals must not be used again, since the proper function of the seal can then no longer be ensured.

10.6.3 Lubricating Seals and Threads

⚠ Caution!

Damage to seals and threads

Damage to seals and threads can result in a malfunction.

► Ensure that an adequate film of lubricant is applied. No grease residues must be visible once the valve has been assembled completely.
► For product contact seals only use suitable greases and oils.
► Observe the safety information sheets issued by the lubricant manufacturer!

Carry out the following steps:

1. Lightly grease the valve disk thread.
2. Grease all seals – including the O-rings at the top and bottom of the actuator piston rod – very thinly.

   ! Do not grease the V-ring

→ Done

Hint!

GEA Tuchenhagen recommends Rivolta F.L.G. MD-2 and PARALIQ GTE 703. These lubricants are approved for foodstuff and are resistant to beer froth. They have the NSF-H1 (USDA H1) registration. They do not affect the taste or the consistency of the products and are compatible with the seals in contact with product.

PARALIQ GTE 703 can be ordered from GEA Tuchenhagen under material no. 413-064, and Rivolta F.L.G. MD-2 can be ordered under material no. 413-071. Using other types of grease can result in malfunctions or in premature seal failure. The warranty will also become null and void.

A Manufacturer's Declaration for these products can be obtained from GEA Tuchenhagen if required.

A thin film of grease is required on the seals to ensure the proper function of the fittings. It reduces friction and extends the service life of the seals. This is absolutely harmless from a health and hygienic point of view.

Running dry must be avoided!

10.7 Installation

Assemble the valve in reverse order of disassembly. Observe the notes and instructions given in the following sections when doing so.

10.7.1 Spring

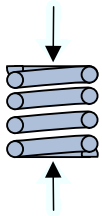

Fig.24

Before the spring is placed into the cleaning hood, both surface ends must be greased.

10.7.2 Cleaning hood

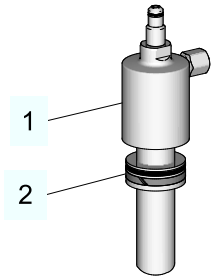

Fig.25

When assembling the cleaning hood, the following instructions must be followed:

a. When assembling the cleaning hood (1), carefully insert the rod guide strip (2) of the abutment into the cleaning hood.

b. After the valve placement has been bolted to the cleaning hood, counter the piston rod against it.

10.7.3 Place the seating ring between the housings

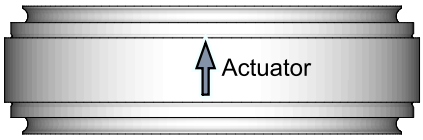

Fig.26

The seating ring should be placed with the arrow pointing to the displayed installation direction. Be extremely careful during assembly that the seating ring is properly placed between the housings so that the arrow later properly displays the direction of the drive when the valve is completely assembled.

10.7.4 Installing the valve into the housing

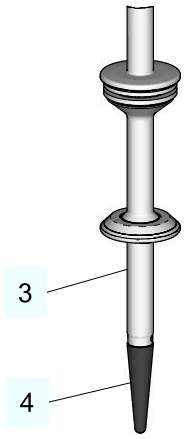

Fig.27

Notice!

Sharp-edged valve disc

To place the valve into the valve housing, the lower extruded seal can be damaged on the valve disc (3).

► Accordingly, during assembly always use a mounting arbour (4).

Carry out the following steps:

1. Place the mounting arbour (4) with the O-ring side into the valve disc (3).
2. Place the valve with the mounting arbour into the housing.
3. Pull the mounting arbour away from the valve disc.

→ Done

10.7.5 Checking assembly

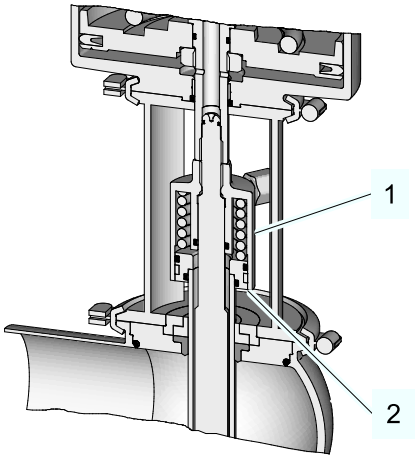

Fig.28

When the valve is closed, the lower edge of the cleaning hood (1) should be flush with the underside of the abutment (2).

10.7.6 Reconnect the cleaning hose

Prerequisite:

- The cleaning hose is made of plastics. When screwing the cleaning hose on, it can become easily constricted in the area of the sealing disc and the cleaning hose can become detached. Therefore, during assembly of the cleaning hose, insert sleeves must be used.

Cleaning hose preparation

Carry out the following steps:

1. Cut off the cleaning with the hose cutter at a right angle.
2. Place insertion sleeves up to the edge of the hose.
3. Grease the threads and cone of the fitting, as well as the sealing disc and the threads of the union nut.

Hint!

GEA Tuchenhagen recommends Rivolta F.L.G. MD-2 and PARALIQ GTE 703. These lubricants are approved for foodstuff and are resistant to beer froth. They have the NSF-H1 (USDA H1) registration. PARALIQ GTE 703 can be ordered under mat. no. 413-064, and Rivolta F.L.G. MD-2 can be ordered under mat. no. 413-071 from GEA Tuchenhagen.

Fitting the cleaning hose

1. Slide the union nut (2) and sealing disc (1) over the cleaning hose disc.

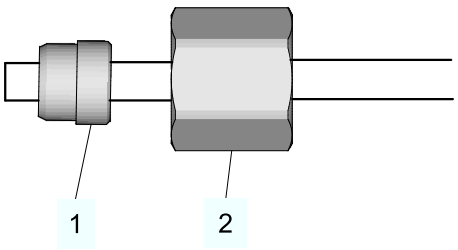

Fig.29

Assembling the cleaning hose

Carry out the following steps:

1. Screw on the union nut hand tight. When the cleaning hose stops, press it against the inner cone.
2. Turn the union nut about another 1 1/2 turns. Do not turn the cleaning hose with the union nut. The stop-edge limits the motion, requiring a greater turning strength.

   ! A marked line on the cleaning hose should aid in making sure that the cleaning hose does not turn.

Checking

Carry out the following steps:

1. Loosen the union nut.
2. Make sure that there is a visible connection (3) in the space before the 1. Make sure the disc fits.

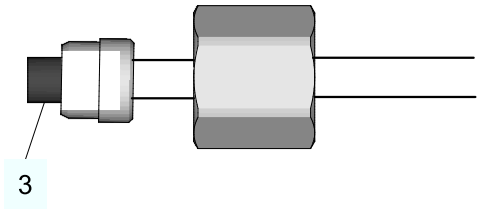

Fig.30

→ It will not hurt if the disc on the end of the cleaning hose turns.

Re-assembly

Carry out the following steps:

1. After removing the union nut replace it without using aggressive force. Make sure that the nozzle is also tight.

→ Done

10.7.7 Torques for the Clamps and Clamp Connections

Tighten the clamp connection and semi-rings on the valve to the torques specified in the table.

Torques		**[Nm]**	**[lbft]**
Clamps on the control top		1	0.7
Clamp connection cast half rings	M6	9	6.6
Clamp connection cast half rings	M8	22	16.2
Cast clamps	M10	45	33

10.7.8 Valve Stroke

Setting the valve stroke

Carry out the following steps:

1. Actuate the valve with compressed air.
2. Check the stroke of the valve in accordance with (Page 55).

→ The stroke is set.

Strokes Depending on Size

Valve Stroke	
Valve size	**Valve stroke [mm]**
Metric	
25	20
40	19
50	27
65	27
80	27
100	27
125	55
150	55
Inch OD	
1"	16
1.5"	18
2"	26
2.5"	27
3"	26
4"	26
6"	55
Inch IPS	

Valve Stroke	
Valve size	**Valve stroke [mm]**
2"	27
3"	27
4"	27

11 Alarms

11.1 Malfunctions and remedies

In the event of malfunctions immediately deactivate the valve and secure it against inadvertent reactivation. Malfunctions may only be remedied by qualified staff, who must observe the safety instructions.

Malfunction	Cause	Remedy
Valve does not work	Fault in the control system	Check the system configuration
	No compressed air or compressed air too low	Check compressed air supply and check air hoses for free passage and air tightness
	Fault in the electrical system	Check actuation / external controller and routing of electrical lines
	Solenoid valve defective	Replace the solenoid valve
Valve does not close	Dirt/foreign material between valve seat and valve disk	Clean valve housing and valve seat
Valve closes too slowly	O-rings in actuator and control top are dry (friction losses)	Grease O-rings
Leakage in the area of the valve housing	Housing O-rings defective	Valve disassembly - Housing Replace the O-Ring
Leakage in the lantern	Sealing ring defective	Replace the sealing ring
Leakage in the leakage cavity	V-rings defective	Replace the V-rings

12 Decommissioning

12.1 Safety instructions

For shutting down, the following principles apply:

- Switch off the compressed air.
- Switch off the valve via the main switch.
- Padlock the main switch (if fitted) in the off position to prevent it from being switched back on. The key to the padlock must be deposited with the person responsible until the machine is restarted.
- For longer periods of standstill, observe the storage conditions, see Section 4.1, Page 22.

12.2 Disposal

12.2.1 General notes

Dispose of the valve in an environmentally friendly manner. Observe the statutory waste disposal regulations applicable at the place of installation.

The valve is made of the following materials:

- Metals
- Synthetic materials
- Electronic parts
- Lubricants containing oil and grease

Separate the different materials and dispose of them correctly sorted. Also observe the instructions regarding disposal in the operating instructions for the individual components.

12.2.2 Valve Actuator Disposal

⚠ Danger

The spring forces in the actuator can be as high as 24 kN.

The pre-stressed spring can cause serious personal injury or death.

► Never open the actuator.
► GEA Tuchenhagen accepts unopened actuators and arranges for proper disposal free of charge.

Carry out the following steps:

1. Remove the actuator.
2. Pack the actuator safely and send it to GEA Tuchenhagen GmbH.

→ Done

13 Spare parts list - dual seat two-way valve Y

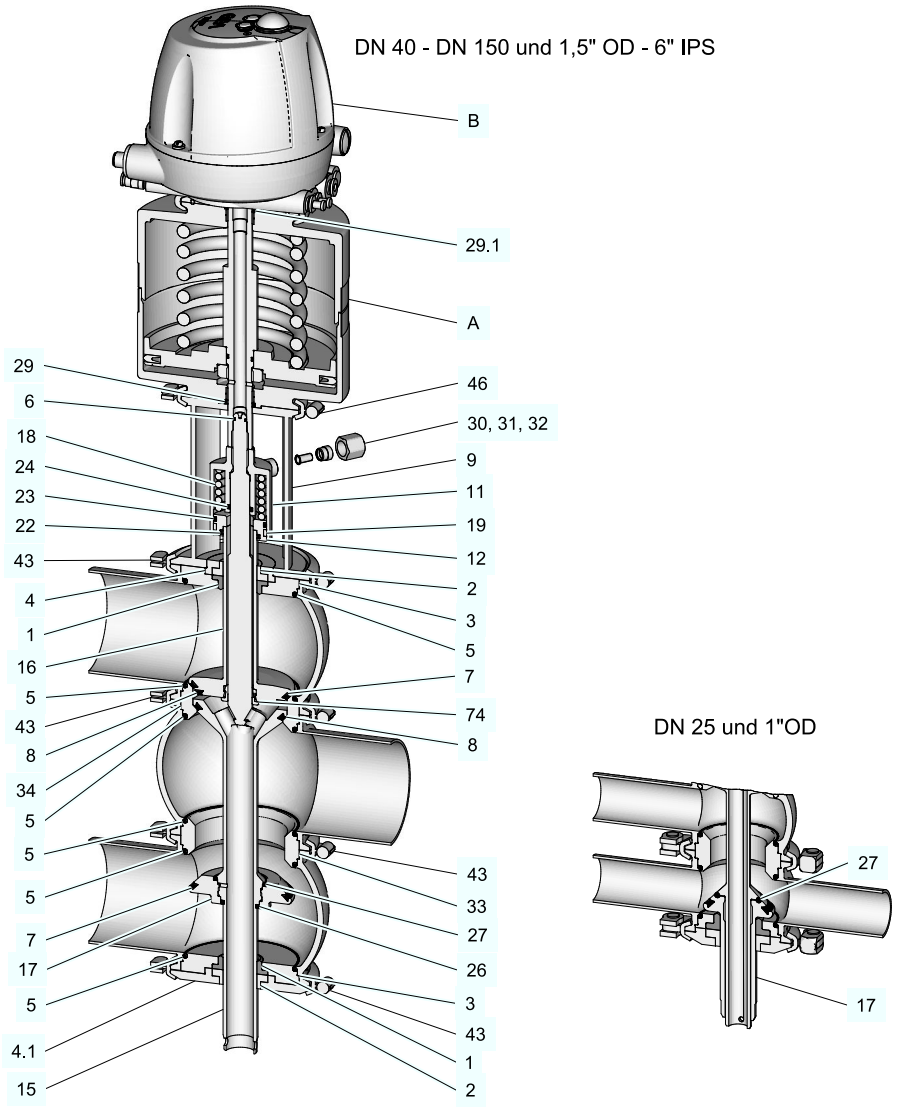

Fig.31: Spare Parts Drawing

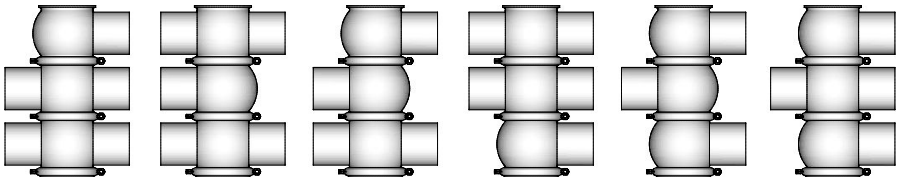

Fig.32: Housing combinations

Item	Designation	Material	DN 25	DN 40	DN 50	DN 65
Sealing kit complete 1)		EPDM	221-519.59	221-304.30	221-304.30	221-304.31
		FKM	221-519.61	221-519.39	221-519.39	221-519.40
		HNBR	221-519.78	221-519.79	221-519.79	221-519.80
1	Sealing ring	EPDM	924-084	924-084	924-084	924-085
		FKM	924-082	924-082	924-082	924-083
		HNBR	924-311	924-311	924-311	924-313
2	Bearing	PTFE/carbon	935-001	935-001	935-001	935-002
	Bearing, 3A	SUSTA-PVDF	935-098	935-098	935-098	935-099
3	Sealing disk	1.4404	221-141.01	221-141.02	221-141.02	221-141.03
4	Bearing disk	1.4301	221-142.01	221-142.02	221-142.02	221-142.03
4.1	Bearing disk D	1.4305	221-142.15	221-142.10	221-142.10	221-142.11
5	O-ring	EPDM	930-309	930-144	930-144	930-150
		FKM	930-168	930-171	930-171	930-176
		HNBR	930-632	930-633	930-633	930-634
6	O-ring	NBR	930-004	930-004	930-004	930-004
**7	V-ring	EPDM	932-046	932-021	932-021	932-024
		FKM	932-030	932-033	932-033	932-035
		HNBR	932-087	932-088	932-088	932-090
**8	V-ring	EPDM	932-017	932-019	932-019	932-023
		FKM	932-029	932-032	932-032	932-034
		HNBR	932-085	932-084	932-084	932-089
9	Lantern	1.4301	221-121.01	221-121.02	221-121.02	221-121.03
11	Cleaning hood	1.4301	221-146.04	221-146.01	221-146.01	221-146.01
12	Support bracket	1.4301	221-148.06	221-148.02	221-148.02	221-148.01
15	Valve head Y	1.4404	221-130.23	221-130.09	221-130.10	221-130.03
16	Double plate D	1.4404	221-112.30	221-112.09	221-112.10	221-112.03
17	Additional plate Y	1.4404	221-123.08	221-123.01	221-123.01	221-123.02
18	Compression spring	1.4310	931-208	931-001	931-001	931-249
19	Guide ring	Turcite	935-058	935-021	935-021	935-021
22	O-ring	EPDM	930-268	930-268	930-268	930-243
		FKM	930-164	930-164	930-164	930-244
		HNBR	930-639	930-639	930-639	930-640
23	O-ring	EPDM	930-525	930-246	930-246	930-246
		FKM	930-802	930-247	930-247	930-247
		HNBR	930-636	930-631	930-631	930-631
24	O-ring	EPDM	930-368	930-235	930-235	930-235
		FKM	930-616	930-162	930-162	930-162
		HNBR	930-635	930-638	930-638	930-638
26	O-ring	EPDM	--	930-270	930-270	930-252
		FKM	--	930-163	930-163	930-165
		HNBR	--	930-637	930-637	930-629

Item	Designation	Material	DN 25	DN 40	DN 50	DN 65
27	O-ring	EPDM	930-350	930-312	930-312	930-246
		FKM	930-269	930-166	930-166	930-247
		HNBR	930-628	930-630	930-630	930-631
29	O-ring	NBR	930-026	930-026	930-026	930-026
29.1	O-ring	NBR	930-026	930-026	930-026	930-026
30	Cap nut	1.4571	933-459	933-456	933-456	933-456
31	Cutting ring	1.4571	933-458	933-455	933-455	933-455
32	Support sleeve	1.4571	933-380	933-382	933-382	933-382
33	Seating ring N	1.4404	221-107.01	221-107.02	221-107.02	221-107.03
34	Seating ring D	1.4404	221-108.01	221-108.02	221-108.02	221-108.03
43	Clamp connection KL	1.4401	221-507.02	221-507.04	221-507.04	221-507.09
46	Clamp connection KL	1.4401	221-507.06	221-507.06	221-507.06	221-507.06
74	Cleaning nozzle	PVDF	221-334.04	221-334.01	221-334.01	221-334.02
401	Housing V1	1.4404	221-101.19	221-101.21	221-101.22	221-101.05
402	Housing V2	1.4404	221-102.41	221-102.43	221-102.44	221-102.05
A	Drive VARIVENT®		See spare parts list/dimensions sheet for VARIVENT drive			
B	Control head T.VIS®		See spare parts list for control head T.VIS®			
Grease RIVOLTA F.L.G. 100g tube not included with sealing kit. ** Do not grease item 7 and 8					413-136	

1) The sealing kit contains items 1, 5, 6, 7, 8, 22, 23, 24, 26, 27, 29 and 29.1

Item	Designation	Material	DN 80	DN 100	DN 125	DN 150
Sealing kit complete 1)		EPDM	221-304.31	221-304.32	221-304.33	221-304.34
		FKM	221-519.40	221-519.41	221-519.42	221-519.43
		HNBR	221-519.80	--	--	--
1*	Sealing ring	EPDM	924-085	924-085	924-088	924-088
		FKM	924-083	924-083	924-087	924-087
		HNBR	924-313	924-313	--	--
2	Bearing	PTFE/carbon	935-002	935-002	935-003	935-003
	Bearing, 3A	SUSTA-PVDF	935-099	935-099	935-102	935-102
3	Sealing disk	1.4404	221-141.03	221-141.04	221-141.07	221-141.05
4	Bearing disk	1.4301	221-142.03	221-142.03	221-142.04	221-142.04
4.1	Bearing disk D	1.4305	221-142.11	221-142.12	221-142.13	221-142.14
5*	O-ring	EPDM	930-150	930-156	930-372	930-260
		FKM	930-176	930-178	930-409	930-259
		HNBR	930-634	930-863	--	--
6*	O-ring	NBR	930-004	930-004	930-007	930-007
**7*	V-ring	EPDM	932-024	932-028	932-060	932-042
		FKM	932-035	932-039	932-062	932-041
		HNBR	932-090	932-100	--	--
**8*	V-ring	EPDM	932-023	932-027	932-059	932-045
		FKM	932-034	932-038	932-063	932-044
		HNBR	932-089	932-099	--	--
9	Lantern	1.4301	221-121.03	221-121.04	221-121.06	221-121.22
11	Cleaning hood	1.4301	221-146.01	221-146.01	221-146.02	221-146.02
12	Support bracket	1.4301	221-148.01	221-148.01	221-148.03	221-148.03
15	Valve head Y	1.4404	221-130.04	221-130.05	221-130.08	221-130.25
16	Double plate D	1.4404	221-112.04	221-112.05	221-112.08	221-112.07
17	Additional plate Y	1.4404	221-123.02	221-123.03	221-123.05	221-123.04
18	Compression spring	1.4310	931-249	931-002	931-093	931-093
19	Guide ring	Turcite	935-021	935-021	935-025	935-024
22	O-ring	EPDM	930-243	930-243	930-356	930-356
		FKM	930-244	930-244	930-357	930-357
		HNBR	930-640	930-640	--	--
23	O-ring	EPDM	930-246	930-246	930-266	930-266
		FKM	930-247	930-247	930-265	930-265
		HNBR	930-631	930-631	--	--
24	O-ring	EPDM	930-235	930-235	930-268	930-268
		FKM	930-162	930-162	930-164	930-164
		HNBR	930-638	930-638	930-639	930-639
26	O-ring	EPDM	930-252	930-252	930-246	930-246
		FKM	930-165	930-165	930-247	930-247
		HNBR	930-629	930-629	930-631	930-631

Item	Designation	Material	DN 80	DN 100	DN 125	DN 150
27	O-ring	EPDM	930-246	930-246	930-364	930-364
		FKM	930-247	930-247	930-299	930-299
		HNBR	930-631	930-631	--	--
29*	O-ring	NBR	930-026	930-026	930-035	930-035
29.1*	O-ring	NBR	930-026	930-026	930-026	930-026
30	Cap nut	1.4571	933-456	933-456	933-482	933-482
31	Cutting ring	1.4571	933-455	933-455	933-481	933-481
32	Support sleeve	1.4571	933-382	933-382	933-385	933-385
33	Seating ring N	1.4404	221-107.03	221-107.04	221-107.18	221-107.06
34	Seating ring D	1.4404	221-108.03	221-108.04	221-108.12	221-108.06
43	Clamp connection KL	1.4401	221-507.09	221-507.11	221-507.13	221-507.14
46	Clamp connection KL	1.4401	221-507.06	221-507.06	221-507.11	221-507.11
74	Cleaning nozzle	PVDF	221-334.02	221-334.02	221-334.03	221-334.03
401	Housing V1	1.4404	221-101.06	221-101.07	221-101.18	221-101.66
402	Housing V2	1.4404	221-102.06	221-102.07	221-102.29	221-102.09
A	Drive VARIVENT®		See spare parts list/dimensions sheet for VARIVENT® drive			
B	Control head T.VIS®		See spare parts list for control head T.VIS®			
Grease RIVOLTA F.L.G. 100g tube not included with sealing kit. ** Do not grease item 7 and 8					413-136	

1) The sealing kit contains items 1, 5, 6, 7, 8, 22, 23, 24, 26, 27, 29 and 29.1

Item	Designation	Material	1" OD	1.5" OD	2" OD	2.5" OD
Sealing kit complete 1)		EPDM	221-519.59	221-304.30	221-304.30	221-304.31
		FKM	221-519.61	221-519.39	221-519.39	221-519.40
		HNBR	221-519.78	221-519.79	221-519.79	221-519.80
1	Sealing ring	EPDM	924-084	924-084	924-084	924-085
		FKM	924-082	924-082	924-082	924-083
		HNBR	924-311	924-311	924-311	924-313
2	Bearing	PTFE/carbon	935-001	935-001	935-001	935-002
	Bearing, 3A	SUSTA-PVDF	935-098	935-098	935-098	935-099
3	Sealing disk	1.4404	221-141.01	221-141.02	221-141.02	221-141.03
4	Bearing disk	1.4301	221-142.01	221-142.02	221-142.02	221-142.03
4.1	Bearing disk D	1.4301	221-142.15	221-142.10	221-142.10	221-142.11
5	O-ring	EPDM	930-309	930-144	930-144	930-150
		FKM	930-168	930-171	930-171	930-176
		HNBR	930-632	930-633	930-633	930-634
6	O-ring	NBR	930-004	930-004	930-004	930-004
**7	V-ring	EPDM	932-046	932-021	932-021	932-024
		FKM	932-030	932-033	932-033	932-035
		HNBR	932-087	932-088	932-088	932-090
**8	V-ring	EPDM	932-017	932-019	932-019	932-023
		FKM	932-029	932-032	932-032	932-034
		HNBR	932-085	932-084	932-084	932-089
9	Lantern	1.4301	221-121.01	221-121.07	221-121.07	221-121.08
11	Cleaning hood	1.4301	221-146.04	221-146.01	221-146.01	221-146.01
12	Support bracket	1.4301	221-148.06	221-148.02	221-148.02	221-148.01
15	Valve head Y	1.4404	221-130.24	221-130.11	221-130.12	221-130.13
16	Double plate D	1.4404	221-112.30	221-112.09	221-112.10	221-112.03
17	Additional plate Y	1.4404	221-123.08	221-123.01	221-123.01	224-123.02
18	Compression spring	1.4310	931-208	931-001	931-001	931-249
19	Guide ring	Turcite	935-058	935-021	935-021	935-021
22	O-ring	EPDM	930-268	930-268	930-268	930-243
		FKM	930-164	930-164	930-164	930-244
		HNBR	930-639	930-639	930-639	930-640
23	O-ring	EPDM	930-525	930-246	930-246	930-246
		FKM	930-802	930-247	930-247	930-247
		HNBR	930-636	930-631	930-631	930-631
24	O-ring	EPDM	930-368	930-235	930-235	930-235
		FKM	930-616	930-162	930-162	930-162
		HNBR	930-635	930-638	930-638	930-638
26	O-ring	EPDM	--	930-270	930-270	930-252
		FKM	--	930-163	930-163	930-165
		HNBR	--	930-637	930-637	930-629

Item	Designation	Material	1"OD	1.5"OD	2" OD	2-5" OD
27	O-ring	EPDM	930-350	930-312	930-312	930-246
		FKM	930-269	930-166	930-166	930-247
		HNBR	930-628	930-630	930-630	930-631
29*	O-ring	NBR	930-026	930-026	930-026	930-026
29.1*	O-ring	NBR	930-026	930-026	930-026	930-026
30	Cap nut	1.4571	933-459	933-456	933-456	933-456
31	Cutting ring	1.4571	933-458	933-455	933-455	933-455
32	Support sleeve	1.4571	933-380	933-382	933-382	933-382
33	Seating ring N	1.4404	221-107.01	221-107.02	221-107.02	221-107.03
34	Seating ring D	1.4404	221-108.01	221-108.02	221-108.02	221-108.03
43	Clamp connection KL	1.4401	221-507.02	221-507.04	221-507.04	221-507.09
46	Clamp connection KL	1.4401	221-507.06	221-507.06	221-507.06	221-507.06
74	Cleaning nozzle	PVDF	221-334.04	221-334.01	221-334.01	221-334.02
401	Housing V1	1.4404	221-101.27	221-101.28	221-101.29	221-101.30
402	Housing V2	1.4404	221-102.52	221-102.53	221-102.54	221-102.55
A	Drive VARIVENT®		See spare parts list/dimensions sheet for VARIVENT® drive			
B	Control head T.VIS®		See spare parts list for control head T.VIS®			
Grease RIVOLTA F.L.G. 100g tube not included with sealing kit. ** Do not grease item 7 and 8						413-136

1) The sealing kit contains items 1, 5, 6, 7, 8, 22, 23, 24, 26, 27, 29 and 29.1

Item	Designation	Material	3"OD	4"OD	6" OD
Sealing kit complete 1)		EPDM	221-304.31	221-304.32	221-304.34
		FKM	221-519.40	221-519.41	221-519.43
		HNBR	221-519.80	--	--
1	Sealing ring	EPDM	924-085	924-085	924-088
		FKM	924-083	924-083	924-087
		HNBR	924-313	924-313	--
2	Bearing	PTFE/carbon	935-002	935-002	935-003
	Bearing, 3A	SUSTA-PVDF	935-099	935-099	935-102
3	Sealing disk	1.4404	221-141.03	221-141.04	221-141.05
4	Bearing disk	1.4301	221-142.03	221-142.03	221-142.04
4.1	Bearing disk D	1.4301	221-142.11	221-142.12	221-142.14
5	O-ring	EPDM	930-150	930-156	930-260
		FKM	930-176	930-178	930-259
		HNBR	930-634	930-863	--
6	O-ring	NBR	930-004	930-004	930-007
**7	V-ring	EPDM	932-024	932-028	932-042
		FKM	932-035	932-039	932-041
		HNBR	932-090	932-100	--
**8	V-ring	EPDM	932-023	932-027	932-045
		FKM	932-034	932-038	932-044
		HNBR	932-089	932-099	--
9	Lantern	1.4301	221-121.08	221-121.09	221-121.22
11	Cleaning hood	1.4301	221-146.01	221-146.01	221-146.02
12	Support bracket	1.4301	221-148.01	221-148.01	221-148.03
15	Valve head Y	1.4404	221-130.14	221-130.15	221-130.30
16	Double plate D	1.4404	221-112.04	221-112.05	221-112.07
17	Additional plate Y	1.4404	221-123.02	221-123.03	221-123.04
18	Compression spring	1.4310	931-249	931-002	931-093
19	Guide ring	Turcite	935-021	935-021	935-024
22	O-ring	EPDM	930-243	930-243	930-356
		FKM	930-244	930-244	930-357
		HNBR	930-640	930-640	--
23	O-ring	EPDM	930-246	930-246	930-266
		FKM	930-247	930-247	930-265
		HNBR	930-631	930-631	--
24	O-ring	EPDM	930-235	930-235	930-268
		FKM	930-162	930-162	930-164
		HNBR	930-638	930-638	930-639
26	O-ring	EPDM	930-252	930-252	930-246
		FKM	930-165	930-165	930-247
		HNBR	930-629	930-629	930-631

Item	Designation	Material	3"OD	4"OD	6" OD
27	O-ring	EPDM	930-246	930-246	930-364
		FKM	930-247	930-247	930-299
		HNBR	930-631	930-631	--
29*	O-ring	NBR	930-026	930-026	930-035
29.1*	O-ring	NBR	930-026	930-026	930-026
30	Cap nut	1.4571	933-456	933-456	933-482
31	Cutting ring	1.4571	933-455	933-455	933-481
32	Support sleeve	1.4571	933-382	933-382	933-385
33	Seating ring N	1.4404	221-107.03	221-107.04	221-107.06
34	Seating ring D	1.4404	221-108.03	221-108.04	221-108.06
43	Clamp connection KL	1.4401	221-507.09	221-507.11	221-507.14
46	Clamp connection KL	1.4401	221-507.06	221-507.06	221-507.11
74	Cleaning nozzle	PVDF	221-334.02	221-334.02	221-334.03
401	Housing V1	1.4404	221-101.31	221-101.32	221-101.17
402	Housing V2	1.4404	221-102.56	221-102.57	221-102.58
A	Drive VARIVENT®		See spare parts list/dimensions sheet for VARIVENT® drive		
B	Control head T.VIS®		See spare parts list for control head T.VIS®		
Grease RIVOLTA F.L.G. 100g tube not included with sealing kit. ** Do not grease item 7 and 8				413-136	

1) The sealing kit contains items 1, 5, 6, 7, 8, 22, 23, 24, 26, 27, 29 and 29.1

Item	Designation	Material	2" IPS	3" IPS	4" IPS	6" IPS
Sealing kit complete 1)		EPDM	221-304.30	221-304.31	221-304.32	221-304.34
		FKM	221-519.39	221-519.40	221-519.41	221-519.43
		HNBR	221-519.79	221-519.80	--	--
1	Sealing ring	EPDM	924-084	924-085	924-085	924-088
		FKM	924-082	924-083	924-083	924-087
		HNBR	924-311	924-313	924-313	--
2	Bearing	PTFE/carbon	935-001	935-002	935-002	935-003
	Bearing, 3A	SUSTA-PVDF	935-098	935-099	935-099	935-102
3	Sealing disk	1.4404	221-141.02	221-141.03	221-141.04	221-141.05
4	Bearing disk	1.4301	221-142.02	221-142.03	221-142.03	221-142.04
4.1	Bearing disk D	1.4301	221-142.10	221-142.11	221-142.12	221-142.14
5	O-ring	EPDM	930-144	930-150	930-156	930-260
		FKM	930-171	930-176	930-178	930-259
		HNBR	930-633	930-634	930-863	--
6	O-ring	NBR	930-004	930-004	930-004	930-007
**7	V-ring	EPDM	932-021	932-024	932-028	932-042
		FKM	932-033	932-035	932-039	932-041
		HNBR	932-088	932-090	932-100	--
**8	V-ring	EPDM	932-019	932-023	932-027	932-045
		FKM	932-032	932-034	932-038	932-044
		HNBR	932-084	932-089	932-099	--
9	Lantern	1.4301	221-121.12	221-121.10	221-121.11	221-121.05
11	Cleaning hood	1.4301	221-146.01	221-146.01	221-146.01	221-146.02
12	Support bracket	1.4301	221-148.02	221-148.01	221-148.01	221-148.03
15	Valve head Y	1.4404	221-130.17	221-130.16	221-130.22	221-130.07
16	Double plate D	1.4404	221-112.10	221-112.04	221-112.05	221-112.07
17	Additional plate Y	1.4404	221-123.01	221-123.02	221-123.03	221-123.04
18	Compression spring	1.4310	931-001	931-249	931-002	931-093
19	Guide ring	Turcite	935-021	935-021	935-021	935-024
22	O-ring	EPDM	930-268	930-243	930-243	930-356
		FKM	930-164	930-244	930-244	930-257
		HNBR	930-639	930-640	930-640	--
23	O-ring	EPDM	930-246	930-246	930-246	930-266
		FKM	930-247	930-247	930-247	930-265
		HNBR	930-631	930-631	930-631	--
24	O-ring	EPDM	930-235	930-235	930-235	930-268
		FKM	930-162	930-162	930-162	930-164
		HNBR	930-638	930-638	930-638	--
26	O-ring	EPDM	930-270	930-252	930-252	930-246
		FKM	930-163	930-165	930-165	930-247
		HNBR	930-637	930-629	930-629	--

Item	Designation	Material	2" IPS	3" IPS	4" IPS	6" IPS
27	O-ring	EPDM	930-312	930-246	930-246	930-346
		FKM	930-166	930-247	930-247	930-299
		HNBR	930-630	930-631	930-631	--
29	O-ring	NBR	930-026	930-026	930-026	930-035
29.1	O-ring	NBR	930-026	930-026	930-026	930-026
30	Cap nut	1.4571	933-456	933-456	933-456	933-482
31	Cutting ring	1.4571	933-455	933-455	933-455	933-481
32	Support sleeve	1.4571	933-382	933-382	933-382	933-385
33	Seating ring N	1.4404	221-107.02	221-107.03	221-107.04	221-107.06
34	Seating ring D	1.4404	221-108.02	221-108.03	221-108.04	221-108.06
43	Clamp connection KL	1.4401	221-507.04	221-507.03	221-507.11	221-507.14
46	Clamp connection KL	1.4401	221-507.06	221-507.09	221-507.06	221-507.11
74	Cleaning nozzle	PVDF	221-334.01	221-334.02	221-334.02	221-334.03
401	Housing V1	1.4404	221-101.37	221-101.35	221-101.36	221-101.17
402	Housing V2	1.4404	221-102.62	221-102.59	221-102.60	221-102.17
A	Drive VARIVENT®		See spare parts list/dimensions sheet for VARIVENT® drive			
B	Control head T.VIS®		See spare parts list for control head T.VIS®			
Grease RIVOLTA F.L.G. 100g tube not included with sealing kit. ** Do not grease item 7 and 8					413-136	

1) The sealing kit contains items 1, 5, 6, 7, 8, 22, 23, 24, 26, 27, 29 and 29.1

Sealing kits for dual seat two-way valve Y									
Item	**Qty**	**Designation**	**Material**	**DN 25 1"**	**DN 40/50 1.5"/2"**	**DN 65/80 2.5"/3"**	**DN 100 4"**	**DN 125**	**DN 150 6"**
1	2	Sealing ring	Ø	22	22	28	28	35	35
			EPDM	924-084	924-084	924-085	924-085	924-088	924-088
			FKM	924-082	924-082	924-083	924-083	924-087	924-087
			HNBR	924-311	924-311	924-313	924-313	--	--
5	6	O-ring	Ø	42 x 3	60 x 3	85 x 4	113 x 4	138 x 4	158 x 5
			EPDM	930-309	930-144	930-150	930-156	930-372	930-260
			FKM	930-168	930-171	930-176	930-178	930-409	930-259
			HNBR	930-632	930-633	930-634	930-863	--	--
6	1	O-ring	Ø	8 x 1.6	8 x 1.6	8 x 1.6	8 x 1.6	9 x 3	9 x 3
			NBR	930-004	930-004	930-004	930-004	930-007	930-007
**7	2	V-ring	Ø	35-5	52-6	76-6	104-6	128-6	148-6
			EPDM	932-046	932-021	932-024	932-028	932-060	932-042
			FKM	932-030	932-033	932-035	932-039	932-062	932-041
			HNBR	932-087	932-088	932-090	932-100	--	--
**8	2	V-ring	Ø	28-5	44-6	68-6	96-6	120-6	140-6
			EPDM	932-017	932-019	932-023	932-027	932-059	932-045
			FKM	932-029	932-032	932-034	932-038	932-063	932-044
			HNBR	932-085	932-084	932-089	932-099	--	--
22	1	O-ring	Ø	22 x 3	22 x 3	28 x 3	28 x 3	35 x 3	35 x 3
			EPDM	930-268	930-268	930-243	930-243	930-356	930-356
			FKM	930-164	930-164	930-244	930-244	930-357	930-357
			HNBR	930-639	930-639	930-640	930-640	--	--
23	1	O-ring	Ø	30 x 3	38 x 3	38 x 3	38 x 3	56 x 3	56 x 3
			EPDM	930-525	930-246	930-246	930-246	930-266	930-266
			FKM	930-802	930-247	930-247	930-247	930-265	930-265
			HNBR	930-636	930-631	930-631	930-631	--	--
24	1	O-ring	Ø	10 x 2.5	16 x 3	16 x 3	16 x 3	22 x 3	22 x 3
			EPDM	930-368	930-235	930-235	930-235	930-268	930-268
			FKM	930-616	930-162	930-162	930-162	930-164	930-164
			HNBR	930-635	930-638	930-638	930-638	930-639	930-639
26	1	O-ring	Ø	--	20 x 3	26 x 3	26 x 3	38 x 3	38 x 3
			EPDM	--	930-270	930-252	930-252	930-246	930-246
			FKM	--	930-163	930-165	930-165	930-247	930-247
			HNBR	--	930-637	930-629	930-629	930-631	930-631
27	1	O-ring	Ø	23 x 3	32 x 3	38 x 3	38 x 3	50 x 3	50 x 3
			EPDM	930-350	930-312	930-246	930-246	930-364	930-364
			FKM	930-269	930-166	930-247	930-247	930-299	930-299
			HNBR	930-628	930-630	930-631	930-631	--	--
29	1	O-ring	Ø	20 x 3	20 x 3	20 x 3	20 x 3	25 x 3	25 x 3
			NBR	930-026	930-026	930-026	930-026	930-035	930-035
29.1	1	O-ring	Ø	20 x 3	20 x 3	20 x 3	20 x 3	20 x 3	20 x 3

Sealing kits for dual seat two-way valve Y									
Item	**Qty**	**Designation**	**Material**	**DN 25 1"**	**DN 40/50 1.5"/2"**	**DN 65/80 2.5"/3"**	**DN 100 4"**	**DN 125**	**DN 150 6"**
			NBR	930-026	930-026	930-026	930-026	930-026	930-026
Sealing kit complete			EPDM	221-519.59	221-304.30	221-304.31	221-304.32	221-304.33	221-304.34
			FKM	221-519.61	221-519.39	221-519.40	221-519.41	221-519.42	221-519.43
			HNBR	221-519.78	221-519.79	221-519.80	--	--	--
Grease RIVOLTA F.L.G. 100g tube not included with sealing kit. ** Do not grease item 7 and 8						413-136			

Storage instructions: storage in accordance with DIN 7716

Relative humidity approx. 65%, temperature 15-25°C and light-protected

When replacing seals, observe the instructions in the Operating Instructions!

429-018

14 Appendix

14.1 Lists

14.1.1 Abbreviations and terms

Abbreviation	Explanation
BS	British Standard
bar	Unit of measurement of pressure [bar] All pressure data expressed in [bar/psi] is assumed to be gauge pressure [barg/psig] unless explicitly specified otherwise.
approx.	approximately
°C	Unit of measurement of temperature [degree Celsius]
dm^3_n	Unit of measurement of volume [cubic decimetre] Standard volume (standard litre)
DN	DIN nominal width
DIN	German standard issued by DIN (Deutsches Institut für Normung e.V., German Institute for Standardization)
EN	European Standard
EPDM	Material designation Short designation according to DIN/ISO 1629: Ethylene Propylene Diene Rubber
°F	Unit of measurement of temperature [degree Fahrenheit]
FKM	Material designation, short designation according to DIN/ISO 1629: Fluorine rubber
h	Unit of measurement of time [hour]
HNBR	Material designation Short designation according to DIN/ISO 1629: Hydrogenated Acrylonitrile Butadiene Rubber
IP	Protection class
ISO	International standard issued by the International Organisation for Standardisation
kg	Unit of measurement of weight [kilogram]
kN	Unit of measurement of force [kilonewton]
Kv value	Flow coefficient [m³/s] 1 KV = 0,86 x Cv
l	Unit of measurement of volume [litre]
max.	maximum
mm	Unit of measurement of length [millimetre]
µm	Unit of measurement of length [micrometre]

Abbreviation	Explanation
M	Metric
Nm	Unit of measurement of work [newton metre] Specification of torque 1 Nm = 0.737 lbft Pound-Force (lb) + Feet (ft)
PA	Polyamide
PE-LD	Low-density polyethylene
PPE	Polytetrafluoroethylene
psi	America measurement for pressure [Pound-forse per square inch] All pressure data expressed in [bar/psi] is assumed to be gauge pressure [barg/psig] unless explicitly specified otherwise.
PTFE	Polytetrafluoroethylene
SET-UP	Self-learning installation During commissioning and maintenance, the SET-UP procedure carries out all the necessary settings for the generation of messages.
AF	Specifications for the size of spanners width across flats
T.VIS	Tuchenhagen Valve Information System
V AC	Volt alternating current
V DC	Volt direct current
W	Unit of measurement of power [Watt]
TIG	Welding method Tungsten inert gas welding
Inch	Unit of measurement of length in the Anglo-American language area
Inch OD	Pipe measurement according to British Standards (BS), Outside Diameter
Inch IPS	American pipe measure - Iron Pipe Size

GEA Tuchenhagen GmbH
Am Industriepark 2-10
21514 Büchen, Germany

Telephone +49 4155 49-0

430BAL008591 Copyright © GEA Tuchenhagen - All rights reserved - Subject to modifications.