OPERATING INSTRUCTIONS

Original instructions



Hygienic valves

GEA VARIVENT® Valve Type B

GEA Tuchenhagen GmbH
Document number: 430BAL008326
Language: EN-GB / Date: 18.11.2025

Copyright © GEA Tuchenhagen GmbH2025. All rights reserved. No liability will be accepted for damage resulting from non-observance of this document. If you have any questions or require clarification concerning the use of this document, contact *Customer service*.

Table of Contents

1 General 7
1.1 Information about the document 7
1.1.1 Purpose and structure of the document 7
1.1.2 Design elements 7
1.1.3 Reading obligation and storage 8
1.2 Manufacturer address 8
1.3 Customer service 8
1.4 More Information about the GEA Group 8
1.5 Declarations of conformity 9

2 Safety 12
2.1 Intended use 12
2.1.1 Requirements for the operation 12
2.1.2 Pressure equipment directive 12
2.1.3 ATEX directive 12
2.1.4 Improper operating conditions 13
2.2 Modification 13
2.3 Structure of warning notices 13
2.3.1 Preceding warning notices 13
2.3.2 Integrated warning notices 13
2.3.3 Signal words 14
2.4 Personnel qualification 14
2.5 General safety instructions 14
2.5.1 General hazard 15
2.5.2 Mechanical hazard 15
2.5.3 Electrical hazard 15
2.5.4 Thermal hazard 16
2.6 Personal protective equipment 16
2.7 Safety devices 16
2.8 Residual dangers 16
2.9 Safety signs 19
2.10 Emergency measures 20

Copyright @ GEA Tuchenhagen GmbH
2025 - All rights reserved

3 Description 21
3.1 Structure and function 21
3.1.1 Design 21
3.1.2 Functional description 22
3.1.3 Signs 23
3.1.4 Protective devices 24
3.2 Technical data 24
3.2.1 Type plate 24
3.2.2 Technical data 25
3.2.3 Cleaning connection 27
3.2.4 Resistance and permitted operating temperature of the sealing materials 28
3.2.5 Pipe ends - General table of measurements 29
3.2.6 Lubricants 30

4 Storage and transport 31
4.1 Scope of supply 31
4.2 Storage 31
4.3 Transport 32

5 Assembly and installation 33
5.1 Notes on installation 33
5.2 Control top 33
5.3 Install the valve with detachable pipe connection elements 33
5.4 Install valve with welding ends 34
5.5 Electrical connection with T.VIS control top 35
5.6 Checking the pneumatic connection 35
5.6.1 Air requirement 35
5.6.2 Establishing hose connections 36

6 Commissioning 38
6.1 Preparing commissioning 38
6.2 Restarting 38

7 Operation and control 39
7.1 Monitoring operation 39
7.2 Shutdown 39

PUBLIC

Copyright @ GEA Tuchenhagen GmbH
2025 - All rights reserved

8 Cleaning 40
8.1 General 40
8.1.1 Cleaning process examples 40
8.1.2 Cleaning results 40
8.2 Cleaning the leakage cavity 41
8.3 Passivation 41

9 Maintenance 42
9.1 Carrying out inspections 42
9.1.1 Checking seals that come into contact with the product 42
9.1.2 Checking the pneumatic connection 42
9.1.3 Checking the electrical connection 43
9.1.4 Checking the signs on the valve 43
9.2 Servicing intervals 43
9.3 List of tools 44
9.4 Prior to removal 45
9.5 Removing the valve 45
9.5.1 Remove control top and withdraw valve insert from housing 46
9.5.2 Remove valve insert without control top from housing 49
9.5.3 Separating the valve insert from the actuator 51
9.5.4 Dismantling the valve insert 53
9.5.5 Dismantling of the housing combination 54
9.6 Maintenance 55
9.6.1 Cleaning the valve 55
9.6.2 Replacing seals 55
9.6.3 Lubricating seals and threads 59
9.7 Installing the valve 59
9.7.1 Tightening torques 60
9.7.2 Assembly of the housing combination 61
9.7.3 Assembling the valve insert from individual parts 63
9.7.4 Assemble valve insert with actuator 64
9.7.5 Mount control top and insert valve insert into housing 66
9.7.6 Insert valve insert into housing without control top 69
9.7.7 Reconnect the cleaning hose 71
9.7.8 Checking the function 72
9.7.8.1 Check valve stroke and adjust feedback 72

10 Malfunctions 74

Copyright @ GEA Tuchenhagen GmbH
2025 - All rights reserved

11 Decommissioning and disposal 75
11.1 Decommissioning 75
11.2 Disposal 75
11.2.1 General information 75
11.2.2 Valve actuator disposal 75

12 Replacement parts 76
12.1 Order information 76
12.2 Spare parts list 76

13 Annex 77
13.1 Dimension sheet 77
13.2 List of abbreviations 77
13.3 List of diagrams 78
13.4 List of tables 79

PUBLIC

Copyright @ GEA Tuchenhagen GmbH
2025 - All rights reserved

1 General

This chapter contains basic instructions for using the valve and explanations of illustration conventions. It also contains information about the design and structure.

The term valve in these Operating Instructions refers to Hygienic valves.

1.1 Information about the document

The present Operating Instructions are part of the user information for the valve. The Operating Instructions contain all the information you need to transport, install, commission, operate and carry out maintenance for the valve.

1.1.1 Purpose and structure of the document

The objective of these Operating Instructions is to provide information on how to operate the valve. To achieve this, it is divided into several chapters which are oriented on the various life phases of the valve. Compliance with the instructions will enhance the valve's longevity and reliability, and reduce the likelihood of harm to individuals or damage to property. The Operating Instructions also acts as the basis for creating operating instructions.

1.1.2 Design elements

In this document, the following design elements are used as orientation aids.

General orientation aids

- Figure numbers
- Table numbers
- Chapter numbers
- Page numbers
- Headers and footers
- References
- Lists

Lists

Bullet points are shown in lists and do not prescribe a specific sequence.

- Bullet point
- Bullet point
  - Sub-point
  - Sub-point
- Bullet point

Numbered lists

In a sequence of actions, the order of the action steps is specified by a numbered list. Partial results and the result of a sequence of actions are marked by arrows.

Copyright @ GEA Tuchenhagen GmbH
2025 - All rights reserved

1. Action step one
2. Action step two
   2.1 First sub-step two
   2.2 Second sub-step two
   → Partial result
3. Action step three
   → Partial result
4. Action step four

⇒ Outcome

INFO

Informational texts contain additional information about a description or action step.

1.1.3 Reading obligation and storage

Every person who works on or with the valve must have read these Operating Instructions. They must be available to these persons at all times.

1.2 Manufacturer address

GEA Tuchenhagen GmbH

Am Industriepark 2-10

Germany

21514 Büchen

1.3 Customer service

Phone: +49 4155 49-0

Fax: +49 4155 49-2035

flowcomponents@gea.com

www.gea.com

1.4 More Information about the GEA Group

www.GEA.com

Overview of technologies and products

PUBLIC

Copyright @ GEA Tuchenhagen GmbH
2025 - All rights reserved

1.5 Declarations of conformity

Engineering for a better world.

EU Declaration of conformity within the meaning of the EC machine directive 2006/42/EC

Manufacturer: **GEA Tuchenhagen GmbH**
Am Industriepark 2-10
21514 Büchen, Germany

Hereby, we declare that the machine designated in the following

Designation:	Valve with acutator
Type:	VARIVENT® / ECOVENT®

by virtue of its design and construction and in the versions placed on the market by us, complies with the essential health and safety requirements of the following directive:

Relevant EC directives:	2006/42/EC	EC Machinery Directive
Applicable harmonized standards, in particular:	EN ISO 12100: 2010	

Remarks:

- In the event of a modification to the machine that was not agreed with us, this declaration loses its validity
- Furthermore, we declare that the specific technical documentation for this machine has been drawn up in accordance with Annex VII, Part A, and undertake to forward this documentation by means of data medium upon justified request by the national authorities

Person authorised for compilation and handover of technical documentation:

GEA Tuchenhagen GmbH
Am Industriepark 2-10
21514 Büchen, Germany

Büchen, 18 July 2025

Sören de Boon
Senior Vice President
Business Unit Valves & Pumps

i.V. Stephan Dirks
Senior Director Product Engineering & Development
Business Line Hygienic Valves/ BU Valves & Pumps

251718_EC-Declaration_VAR-ECO

Copyright @ GEA Tuchenhagen GmbH
2025 - All rights reserved

Translated copy of the EU - Declaration of conformity in accordance with the Pressure Equipment Directive 2006/42/EU

Manufacturer:	GEA Tuchenhagen GmbH Am Industriepark 2-10 21514 Büchen
We hereby declare that the machine named below	
Designation:	Valve with actuator
Type:	VARIVENT® / ECOVENT®
due to its design and construction as well as in the versions sold by us, meet the basic safety and health requirements of the following guideline:	
Relevant EC directives:	2006/42/EC EC Machinery Directive
Applicable harmonized standards, in particular:	EN ISO 12100: 2010
Remarks:	• This declaration will become invalid if any alterations are made to the machine which have not been agreed with us • We also declare that the relevant technical documentation for this machine has been prepared in accordance with Annex VII, Part A, and agree to submit the documentation on justified request of national authorities on a data carrier
Person authorised for compilation and handover of technical documentation:	GEA Tuchenhagen GmbH Am Industriepark 2-10 21514 Büchen, Germany
Büchen, 18th July 2025	
Sören de Boon Senior Vice President Business Unit Valves & Pumps	Signed by Stephan Dirks Senior Director Product Engineering & Development Business Line Hygienic Valves/ BU Valves & Pumps

PUBLIC

Copyright @ GEA Tuchenhagen GmbH
2025 - All rights reserved

Engineering for a better world.

UK- Declaration of conformity by Supply of Machinery (Safety) Regulations 2008

Manufacturer: **GEA Tuchenhagen GmbH**
Am Industriepark 2-10
21514 Büchen, Germany

Hereby, we declare that the machine designated in the following

Designation:	Valve with actuator
Type:	VARIVENT® / ECOVENT®

by virtue of its design and construction and in the versions placed on the market by us, complies with the essential health and safety requirements of the following directive:

Relevant UK legislation:	Supply of Machinery (Safety) Regulations 2008
Applicable harmonized standards, in particular:	EN ISO 12100: 2010

Remarks:

- In the event of a modification to the machine that was not agreed with us, this declaration loses its validity
- Furthermore, we declare that the specific technical documentation for this machine has been drawn up in accordance with Annex VII, Part A, and undertake to forward this documentation by means of data medium upon justified request by the national authorities

GEA Importer into UK	**GEA Mechanical Equipment UK Ltd.** Westfalia House Old Wolverton Road, Old Wolverton, Milton Keynes MK12 5PY, United Kingdom
Person authorised for compilation and handover of technical documentation:	Mike Kiely **GEA Mechanical Equipment UK Ltd.** Westfalia House Old Wolverton Road, Old Wolverton, Milton Keynes MK12 5PY, United Kingdom

Büchen, 23 July 2025

Sören de Boon
Senior Vice President
Business Unit Valves & Pumps

i.V. Stephan Dirks
Senior Director Product Engineering & Development
Business Line Hygienic Valves/ BU Valves & Pumps

Copyright @ GEA Tuchenhagen GmbH
2025 - All rights reserved

2 Safety

This chapter describes the minimum requirements for the intended use of the valve. It forms the basis for safe operation of the valve.

2.1 Intended use

The GEA VARIVENT® Valve Type B is used for the mix-proof shut-off of high-grade, non-abrasive products at intersection points in pipe systems.

The valve is mix-proof following pressure surges.

The valve is resistant to pressure surges in its closed state.

Proper use of the valve also includes compliance with these Operating Instructions.

INFO Do not install the valve as spring-to-open, as it will then open when there is a power or air failure and lead to product mixing.

INFO In a closed pipe system, hydraulic pressure build-up may occur when the valve switches and result in seal damage.

INFO The manufacturer will not accept any liability for damage resulting from any use of the valve which is not in accordance with the designated use of the valve. The risk is borne solely by the operating company.

2.1.1 Requirements for the operation

The prerequisite for the reliable and safe operation of the valve is proper transportation and storage as well as professional installation and assembly. Operating the unit within the limits of its designated use also involves adhering to the operating, maintenance and servicing instructions.

2.1.2 Pressure equipment directive

The valve is a piece of pressure equipment (without safety function) in the sense of the pressure equipment directive 2014/68/EU: Classified according to Annex II in category 1.

According to the scope of directive 2014/34/EC, article 1, paragraph 2, f), the exception of the directive applies, due to conformity with the Machinery Directive 2006/42/EC.

The nominal diameters smaller than DN 25 are subject to article 4, paragraph 3 of the Pressure Equipment Directive which specifies sound engineering practice.

Nominal diameters ≥ IPS 4“; DN 125 valid for the fluid group II.

In the event of any deviations, GEA Tuchenhagen GmbH will supply a special Declaration of Conformity.

2.1.3 ATEX directive

In areas with an explosive atmosphere, only valves suitable for use in such areas may be used.

Refer to and observe the additional instruction manual “ATEX version valves”. For details regarding the marking of valves for potentially hazardous areas also refer to the additional instruction manual “ATEX version valves”.

If these valves are used in areas with a potentially explosive atmosphere, it is mandatory to comply with directive 2014/34/EC with respect to all ignition hazards.

Copyright @ GEA Tuchenhagen GmbH
2025 - All rights reserved

2.1.4 Improper operating conditions

The operational reliability of the valve cannot be ensured under improper operating conditions. Therefore avoid improper operating conditions.

Operating the valve is not permitted if

- Persons or objects are in the danger zone.
- Safety devices are not working or were removed.
- Malfunctions have been detected on the valve.
- Damage has been detected on the valve.
- Maintenance intervals have been exceeded.

2.2 Modification

Subsequent alterations of the valve are not permitted. Otherwise you will have to undergo a new conformity process in accordance with the EC Machinery Directive on your own.

In general, only genuine spare parts supplied by GEA Tuchenhagen GmbH should be fitted. This ensures the reliable and economical operation of the valve.

2.3 Structure of warning notices

Warning notices warn of hazards that may exist when performing certain actions. In this document, the following warning notices are used. The extent of the hazards is categorized into risk levels and can be recognized by the corresponding signal words.

2.3.1 Preceding warning notices

Preceding warning notices are used when there is a hazard during a sequence of actions. Warning notices are colour-highlighted and supplemented by a pictogram in the event of possible personal injury.

⚠SIGNAL WORD



Nature and source of the hazard

Consequence of disregarding the warning.

- Measure to avoid or escape the danger.

Figure 2-1 - Structure of a preceding warning notice

2.3.2 Integrated warning notices

Integrated warning notices are used when there is a hazard involved in a single action step.

1. **SIGNAL WORD** Nature and source of the hazard
   Consequence of disregarding the warning.
   - Measure to avoid or escape the danger.

Figure 2-2 - Structure of an integrated warning notice

Copyright @ GEA Tuchenhagen GmbH
2025 - All rights reserved

2.3.3 Signal words

ATTENTION

The signal word ATTENTION indicates a hazard that could result in property damage if not avoided.

CAUTION

The signal word CAUTION indicates a hazard with a low risk level which could result in light to medium injuries if not avoided.

WARNING

The signal word WARNING indicates a hazard with a medium risk level which could result in death or severe injury if not avoided.

DANGER

The signal word DANGER indicates a hazard with a high risk level which will result in death or serious injury if not avoided.

2.4 Personnel qualification

The following basic requirements must be fulfilled for all actions carried out on the valve.

- These Operating Instructions have been read and understood.
- Safety tasks in and around the valve are regulated and assigned.
  - Maintaining order
  - Compliance with safety requirements
  - Securing hazard zones

Additionally, the following groups of people must possess the personnel qualifications or skills listed below and be authorised by the operator to perform actions on the valve.

Operating staff

- Trained by the operating company, a qualified customer specialist or a GEA service expert

Customer specialist

- Technical training

Trained customer specialist

- Technical training in a specific field of expertise
- Training by GEA personnel or participation in training courses of the GEA Tuchenhagen

GEA service expert

- Personnel from GEA Tuchenhagen, see *1.3 Customer service*

Where necessary, reference is made to the respective group of individuals in these Operating Instructions.

2.5 General safety instructions

The valve was built in accordance with the state of the art and recognised safety regulations at the time of its launch. However, the safety measures stipulated by the operator and listed below must still be adhered to in order to ensure safety.

Copyright @ GEA Tuchenhagen GmbH
2025 - All rights reserved

2.5.1 General hazard

Source	Consequences	Measures
Faulty valve	Injury and damage	Check that the valve is fully functional.
Non-compliance with these Operating Instructions	Injury and damage	Read and familiarise yourself with these Operating Instructions.
Operating materials	Injuries	• Wear personal protective equipment. • Avoid contact with operating materials.

Table 1: General hazard

2.5.2 Mechanical hazard

Source	Consequences	Measures
Moving or rotating components	• Being drawn in or caught • Entrapment • Crushing • Impact	• Remove jewellery. • Tie hair back or wear a hair net. • Wear tight-fitting clothing.
• Gravity • Falling objects	• Impact • Crushing	• Do not walk under suspended loads. • Eliminate stumbling hazards.

Table 2: Mechanical hazards - moving or rotating components

2.5.3 Electrical hazard

Source	Consequences	Measures
Electromagnetic processes	Effects on electronic medical implants	Keep a safe distance if you have a medical implant.
Electrostatic processes	• Electrical shock • Fire • Chemical reaction	• Avoid contact with components • Check the voltage of components. • Wear personal protective equipment. • Remove any leaked flammable substances.

Table 3: Electrical hazard – electromagnetic

Copyright @ GEA Tuchenhagen GmbH
2025 - All rights reserved

2.5.4 Thermal hazard

Source	Consequences	Measures
Objects or materials at high or low temperature	• Freezing • Burns • Scalding	• Wear personal protective equipment. • Wait for room temperature to be reached.

Table 4: Thermal hazards

2.6 Personal protective equipment

To prevent possible personal injuries, the personal protection equipment must be worn.

In addition, GEA recommends keeping the requirements listed below.
- Locally applicable accident prevention regulations
- Instruction manual from the operator or employer

2.7 Safety devices

No safety devices are attached to this valve.

2.8 Residual dangers

Despite all safety measures, the following residual risks can still cause personal injury and property damage at any time.
- Improper use
- Material fatigue

Danger zones

Please observe the following notes:

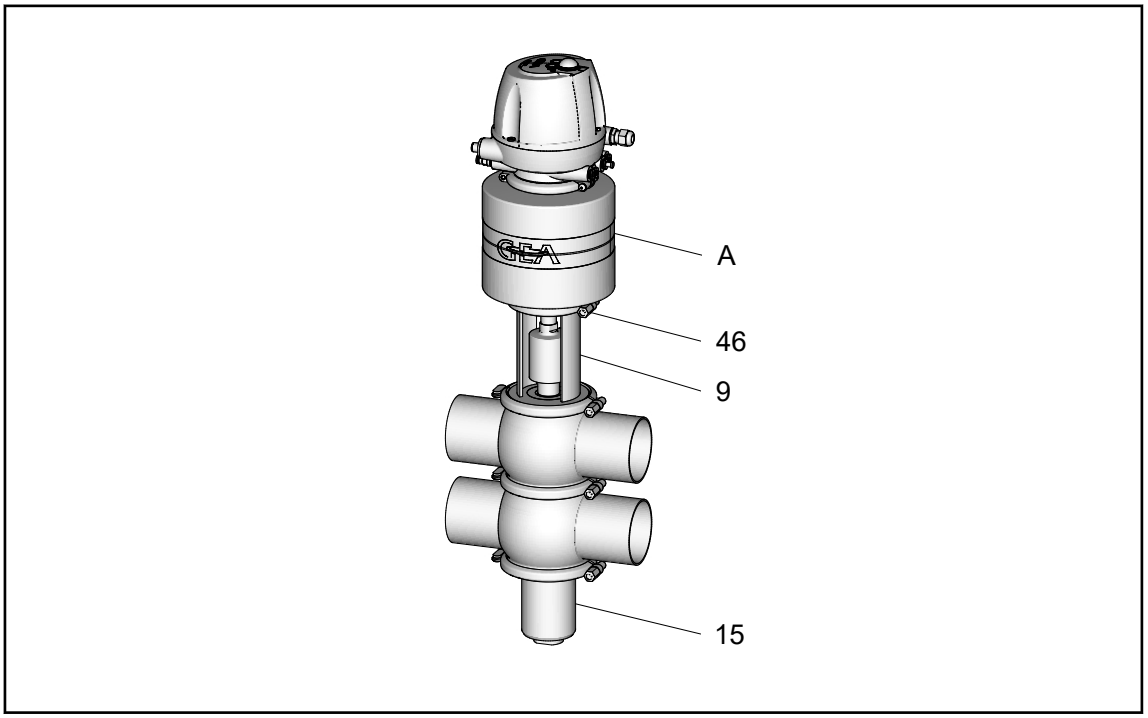

Figure 2-3 - Danger zone at the valve

PUBLIC
Copyright @ GEA Tuchenhagen GmbH
2025 - All rights reserved

- In the event of malfunctions, shut down the valve (disconnect from the power and air supply) and secure it against being used.
- Before starting any maintenance, servicing or repair work, disconnect the valve from the power supply and secure it against inadvertently being switched back on again.
- Only allow a qualified electrician to carry out any work on the electrical power supply.
- Check the electrical equipment of the valve at regular intervals. Immediately remedy loose connections and molten cables.
- If work on live parts cannot be avoided, call in a second person, who can operate the main switch in case of an emergency.

- Never reach into the lantern (9) or the valve housing (402, 73) when the valve is switching. Fingers can be crushed or cut off.
- When the hinged clamps (43, 46) between the lantern and housing of the non-actuated valve (spring-to-close version) is loosened, there is a danger of injury since the released spring pretension will suddenly lift the actuator. For this reason, relieve the spring tension by pressurising the actuator with compressed air – via a solenoid valve or via mounting tool see chapter *9.5 Removing the valve*– before releasing the hinged clamps.
- The housing sockets have very sharp edges. When transporting and installing the valve be sure to wear suitable protective gloves.
- When the valve switches, when the valve seat is being cleaned or if a seal is defective, medium (product cleaning medium) exits from the leakage outlet (15). Collect this liquid in a suitable container such as a funnel or a drip pan and discharge it in a safe manner. Observe the instructions in the safety data sheets issued by the cleaning agent manufacturers.
- During transport and assembly of the valve, always screw the control top and the switch bar out and lift the valve with the eyebolt screwed in. See chapter *4.3 Transport*.

Dangerous situations can be avoided by safety-conscious and proactive behaviour of the personnel and by wearing personal protective equipment.

Residual dangers on the valve and measures

Danger	Cause	Measure
Danger to life	Inadvertent switch-on of the valve	Effectively disconnect all components, effectively prevent switch-on.
	Electric power	Observe the following safety rules: 1. Isolate from the power supply. 2. Take appropriate measures to prevent switch on. 3. Test absence of voltage. 4. Earthing and short-circuiting. 5. Cover or safeguard any adjacent live parts.

Copyright @ GEA Tuchenhagen GmbH
2025 - All rights reserved

Danger	Cause	Measure
	Spring tension in the actuator	Danger to life caused by the pressurised spring in the actuator. Do not open the actuator, rather return it to GEA Tuchenhagen for proper disposal.
Risk of injury	Danger presented by moving or sharp-edged parts	The operator must exercise caution and prudence. For all work: • Wear suitable work clothing. • Never operate the machine if the cover panels are not correctly fitted. • Never open the cover panels during the operation. • Never reach into openings. As a precautionary measure, wear personal protective equipment in the vicinity of the valve: • Protective gloves • Safety shoes
Environmental damage	Operating materials with properties which are harmful to the environment	For all work: • Collect lubricants in suitable collecting vessels. • Dispose of lubricants in accordance with the pertinent regulations.

Table 5: Residual dangers and measures

PUBLIC
Copyright @ GEA Tuchenhagen GmbH
2025 - All rights reserved

Instructions for the Safe Handling of Electronic Components During Welding Work

ATTENTION

Stray welding currents during welding
Can cause damage to electronic components
- Follow the steps below to prevent this.

1. Before starting welding work, carry out the following preparations:
   1.1 Ensure the device is switched off and no electrical connections are active.
   1.2 Disconnect the device from the power supply.
   → This protects the electronic components from potential damage caused by stray welding currents.
2. Establish a correct grounding connection:
   2.1 Place the ground connection of the welding machine as close as possible to the welding point.
   → This minimises the risk of stray welding currents and helps protect nearby electronic components from damage.
3. After completing the welding work, proceed as follows:
   3.1 Remove the welding machine's ground connection.
   3.2 Reconnect the device to the power supply.
   3.3 Perform a function test.

2.9 Safety signs

The safety symbols listed below are attached to the valve.

The position of the applicable safety symbols on the valve are shown in an overview, see *3.1.3 Signs*.

Warning signs



General warning sign

Hazard for persons, conveyed by the additional sign.



Warning, spring tension

Hazard posed by spring tension. Do not open the actuator.



Warning, risk of hand injuries

Hazard posed by closing mechanical components on the valve.



Explosion-hazarded zones warning

Special explosion protection sign

Copyright @ GEA Tuchenhagen GmbH
2025 - All rights reserved

2.10 Emergency measures

In case of any emergencies on the valve, the operating regulations must be observed and the following actions implemented.

Fire

- Call local specialists
- Use extinguishing agents as outlined in the operating regulations
- Exit the hazard zone
- Warn individuals that are endangered

Injuries

- Administer first aid
- Call local emergency services

PUBLIC
Copyright @ GEA Tuchenhagen GmbH
2025 - All rights reserved

3 Description

This chapter contains instructions on how to install the valve and its functions.

3.1 Structure and function

3.1.1 Design

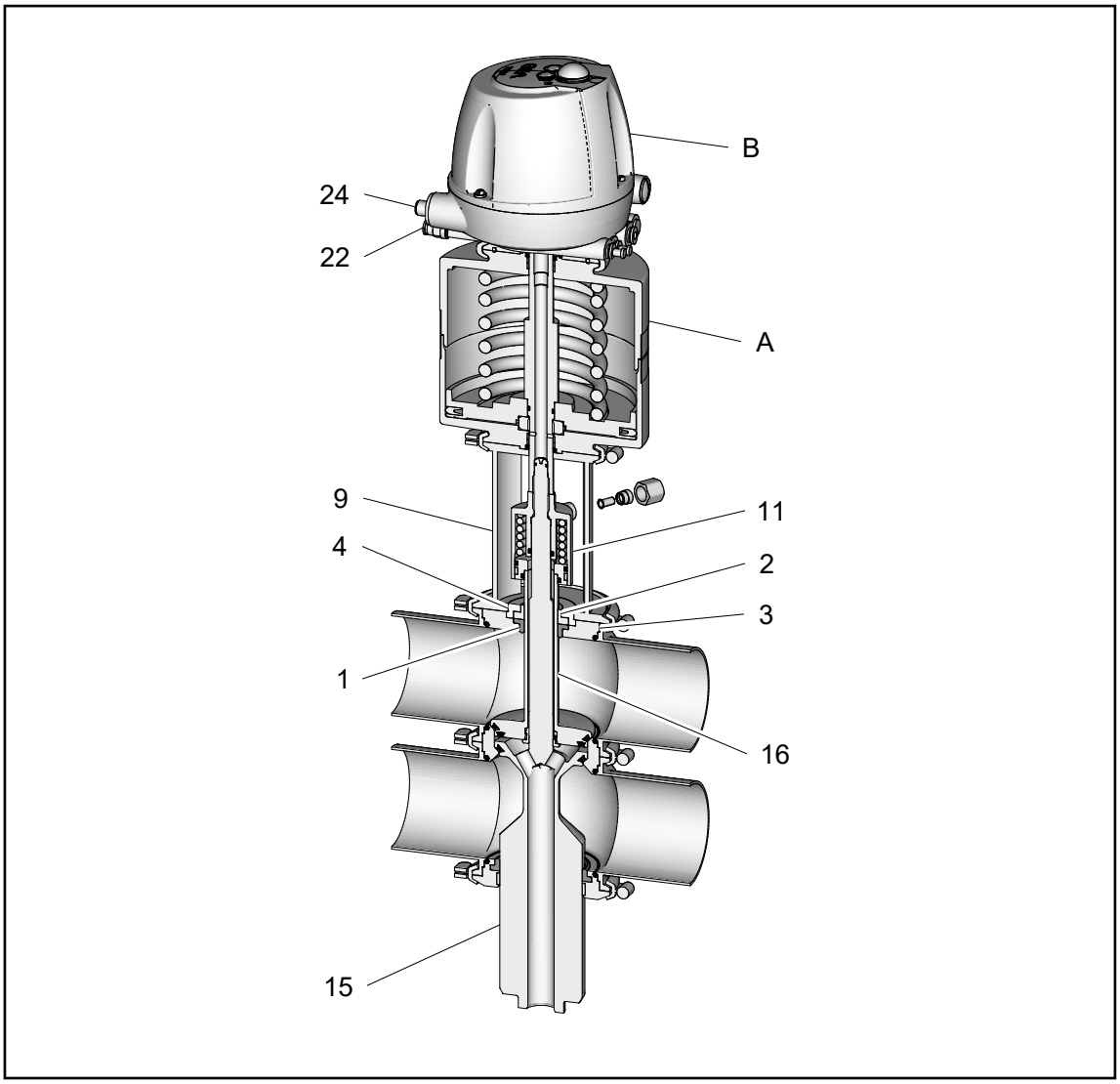

Figure 3-1 - Design of the valve B_L with cleaning connection (left), valve B_C without cleaning connection (right)

Design

No.	Designation
A	Actuator
B	T.VIS control top
2	Bearing
9	Lantern
11	Cleaning hood

Copyright @ GEA Tuchenhagen GmbH
2025 - All rights reserved

No.	Designation
15	Valve disk
16	Double-disk
22	Air connection
24	Electrical connection
91	Cleaning connection
145	Leak indicator

Table 6: Design of the valve

Flushing lock variants

The following flushing lock variants are available:

- Sterile lock HSP

See spare parts drawing for housing configurations.

For further information on the flushing lock, see the assembly instructions “GEA VARI-VENT® Accessories – Flushing Lock.”

3.1.2 Functional description

Mix-proof shut-off function

The Hygienic valves is resistant to pressure surges at pressure level I up to 16 bar, pressure level II up to 25 bar.

On the valve, the upper and the lower valve housing are both sealed by a valve seat.

The cavity between the two valve disks is connected to the environment by the drain pipe integrated into the lower valve stem.

In the event of seal damage, the leaking fluid can safely flow into the open. Defects at the seals can thus easily be detected. Under normal operating conditions, liquid from one pipe is prevented from entering the other pipe.

Spring-to-close actuator function (NC)

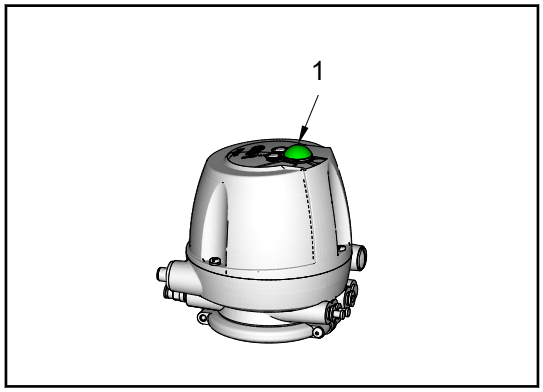

Figure 3-2 - Valve closed in idle position (NC)

The actuator is of the spring-to-close type (NC). The valve is closed in the idle position.
Identification on the T.VIS control top once the installation (SET-UP) has been completed:

- Permanent light (1) green: valve is closed (in idle position)
- Permanent light (1) yellow: valve is open (actuator is activated)

PUBLIC
Copyright @ GEA Tuchenhagen GmbH
2025 - All rights reserved

3.1.3 Signs

Overview and layout

All safety symbols and other signs must meet the following criteria throughout the life cycle of the valve.

- Complete
- Attached as shown
- Clean and legible

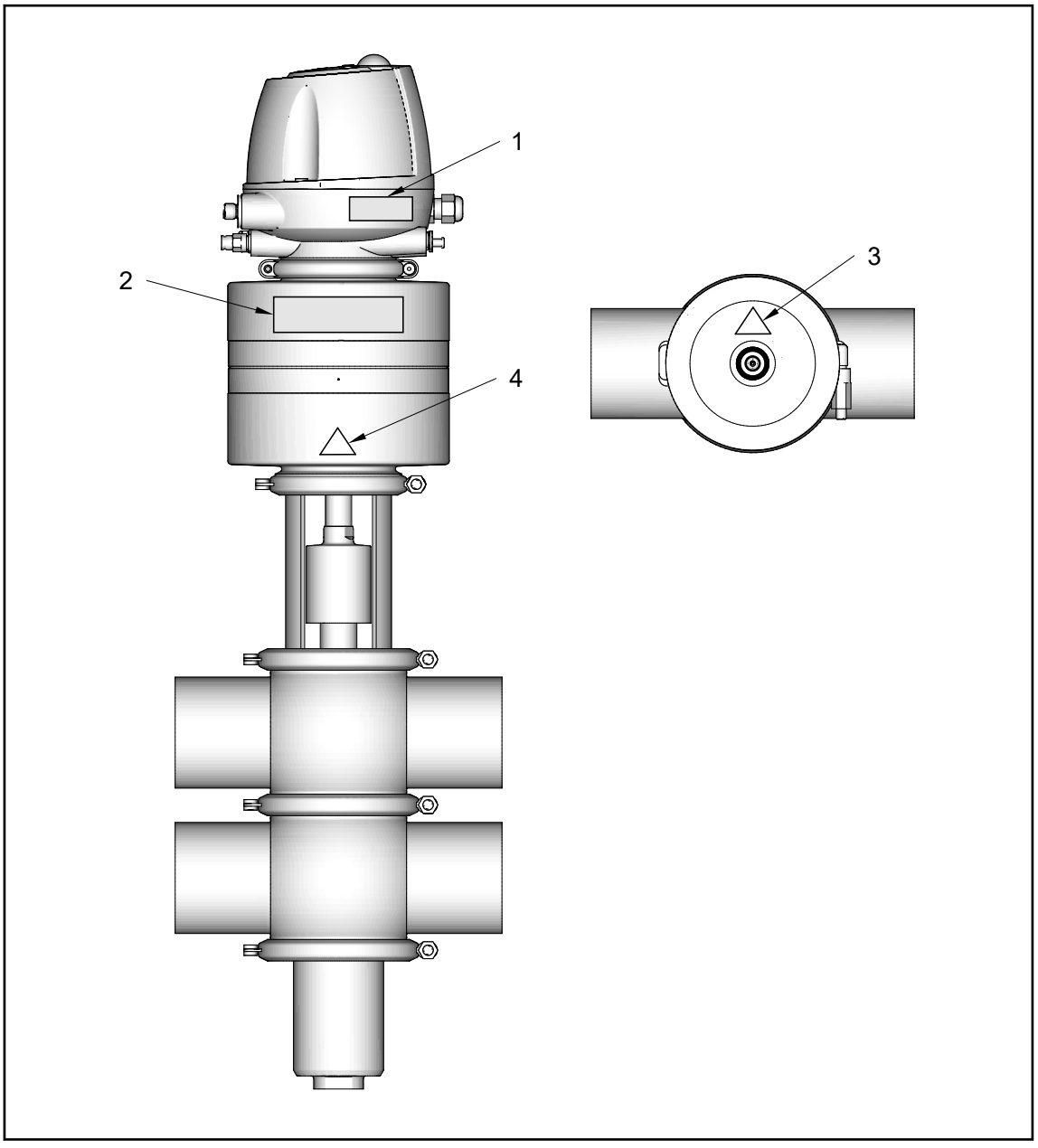

Figure 3-3 - Signs - layout

Copyright @ GEA Tuchenhagen GmbH
2025 - All rights reserved

No.	Signs
1	Type plate T.VIS; adhered to T.VIS
2	Type plate valve; adhered to actuator
3	Warning: do not open, taut springs; adhered to actuator
4	Warning: crushing (refers to the lantern) adhered to actuator after lantern

Table 7: Signs - overview

The representation and meaning of the safety symbols used are listed in an overview corresponding to their category, see chapter *2.9 Safety signs*

3.1.4 Protective devices

No safety devices are attached to this valve.

3.2 Technical data

3.2.1 Type plate

The type plate clearly identifies the valve.

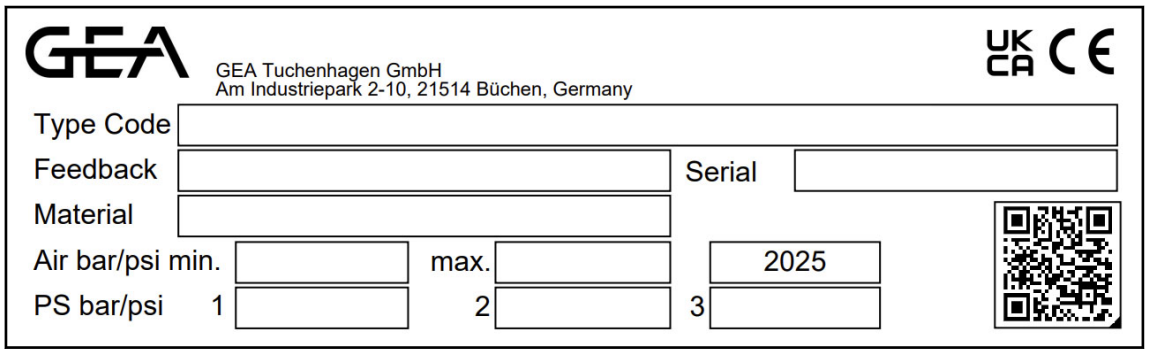

The type plate provides the following key data:

Key data of the valve

Characteristics	Values
Type code	Valve type
Feedback	Order code control top T.VIS
Serial	Serial number
Material	e.g. 1.4404(AISI316L) / EPDM
Control air pressure bar/psi	6 (87)
Product pressure bar/psi	5 (72.5)

Copyright @ GEA Tuchenhagen GmbH
2025 - All rights reserved

3.2.2 Technical data

Refer to the following tables for the key technical data of the valve:

Technical data: valve

Designation	Description
Size	DN 65 to DN 150 2.5" to 4" OD 2" to 6" IPS
Material of product contact parts	Stainless steel 1.4404 / 316L (standard)
Fitting position	Vertical

Table 8: Technical data - valve

Technical data: ambient temperatures

Designation	Description
Valve	0 to 45 °C (32 to 113 °F), standard < 0 °C (32 °F): Use control air with low dew point. Protect valve rods against freezing. < −15 °C: no solenoid valves in the control top < +50 °C: no solenoid valves in the control top
Proximity switch	-20 to +80 °C (-4 to +176 °F)
Control top T.VIS M-20, M-15, A-15, P-15	-20 to +55 °C (-4 to +131 °F)
Control top E-20	Ambient temperatures according to the specific values stated for the gas or dust ignition protection
Product temperature and operating temperature	Dependent on the seal material, see *3.2.4 Resistance and permitted operating temperature of the sealing materials*

Table 9: Technical data - ambient temperatures

Technical data: compressed air supply, product pressure and CIP pressure

Designation	Description
Air hose	
• Metric	Material PE-LD Outside Ø 6 mm +/- 0.1 mm Inside Ø 4 mm
• Inch	Material PA Outside Ø 6.35 mm +/- 0.1 mm Inside Ø 4.3 mm
Control air	acc. to ISO 8573-1
• Solid particle content:	Quality class 6 Particle size max. 5 µm Particle density max. 5 mg/m^3

Copyright @ GEA Tuchenhagen GmbH
2025 - All rights reserved

Designation	Description
• Water content:	Quality class 4 max. dew point +3 °C If the unit is used at higher altitudes or at low ambient temperatures, the dew point must be adapted accordingly.
• Oil content:	Quality class 3 preferably oil free max. 1 mg oil to 1 m^3 air
Control air pressure	6 bar (87 psi), min. 4 bar (58 psi), max. 8 bar (116 psi) Configuration with standard actuator Alternative combinations of product pressure and control air pressure on request
Product pressure	5 bar (72.5 psi) configuration with standard actuator max. 10 bar (116 psi) configuration with correspondingly designed actuator > 10 bar (145.0 psi) for static applications and on request
CIP pressure	2-5 bar, a test may be necessary for higher CIP pressures
Resistance to pressure surges when valve is closed	up to 25 bar

Table 10: Technical data - compressed air supply

Weights

Size		Weight [kg]
Metric	DN 65	24
	DN 80	24
	DN 100	32
	DN 125	51
	DN 150	65
Inch OD	OD 2.5"	23
	OD 3"	24
	OD 4"	32
	OD 6 "	66
Inch IPS	IPS 2"	13

PUBLIC
Copyright @ GEA Tuchenhagen GmbH
2025 - All rights reserved

Size		Weight [kg]
	IPS 3"	25
	IPS 4"	33
	IPS 6"	67

Table 11: Technical data - weights

3.2.3 Cleaning connection

Connection for the hose

Size	Diameter [mm]
DN 65...100	Ø 8/6 mm
2,5"...4" OD; 2"...4" IPS	Ø 8/6 mm
DN 125, 150; 6" IPS; 6" OD	Ø 10/8 mm

Table 12: Cleaning connection - sizes

Service pressure for optimal cleaning:

- min. 2 bar (29 psi)
- max. 5 bar (72.5 psi)

The duration of the rinsing operation via the rinsing valve depends on the type of soiling and typically ranges between 10 and 60 seconds.

The durability of the components of the cleaning connection (sealing disc, support sleeve, PTFE hose) is dependent on the style, pressure and temperature of the required medium.

Durability of the cleaning connection

Medium	Max pressure	Temperature
Water	6 bar (87 psi)	95 °C (203 °F)
5% Nitric Acid	6 bar (87 psi)	60 °C (140 °F)
3% Sulphuric Acid	6 bar (87 psi)	60 °C (140 °F)
5% Nitric Acid	6 bar (87 psi)	85 °C (185 °F)
Steam	3 bar (42 psi)	130 °C (266 °F)

Table 13: Cleaning connection - resistance

Copyright @ GEA Tuchenhagen GmbH
2025 - All rights reserved

3.2.4 Resistance and permitted operating temperature of the sealing materials

The resistance and permitted operating temperature of the sealing materials depend on the type and temperature of the medium conveyed. The exposure time can adversely affect the service life of the seals. The sealing materials comply with the regulations of FDA 21 CFR 177.2600 or FDA 21 CFR 177.1550.

The maximum operating temperature is defined by the seal type and its mechanical load.

Due to the versatile conditions of use (e.g. usage duration, switching frequency, type and temperature of product and cleaning agents as well as usage environment), GEA Tuchenhagen recommends that the user carries out resistance tests.

Resistance:

- + = good resistance
- o = reduced resistance
- – = no resistance

Seal resistance / permissible application temperature of the seal materials

Medium	Maximum operating temperatures	EPDM	FKM	HNBR
Alkalis up to 3%	up to 80 °C (176°F)	+	o	+
Alkalis up to 5%	up to 40 °C (104°F)	+	o	o
Alkalis more than 5%	up to 80 °C (176°F)	+	–	–
Alkalis more than 5%	(no temperature specification)	o	–	–
Inorganic acids up to 3%	up to 80 °C (176°F)	+	+	+
Inorganic acids up to 5%	up to 80 °C (176°F)	o	+	o
Inorganic acids up to 5%	up to 100 °C (212°F)	–	+	–
Water	up to 100 °C (176°F)	+	+	+
Steam	up to 135 °C (275°F)	+	o	o
Steam, approx. 30 min	up to 150 °C (302°F)	+	o	–
Fuels/hydrocarbons		–	+	+
Product with a fat content of max. 35%		+	+	+
Product with a fat content of more than 35%		–	+	+
Oils		–	+	+

Table 14: Resistance and permitted operating temperature of the sealing materials

PUBLIC
Copyright @ GEA Tuchenhagen GmbH
2025 - All rights reserved

Temperature resistance of the sealing materials

Sealing materials	General temperature resistance*
EPDM	-40 to +135 °C (-40 °F to 275 °F)
FKM	-10 to +200 °C (+14 °F to +392 °F)
HNBR	-25 to +140 °C (-13 °F to +284 °F)

* The general resistance of the material does not correspond to the maximum operating temperature.

Table 15: Temperature resistance of the sealing materials

3.2.5 Pipe ends - General table of measurements

INFO Not every valve is available in every size. For information about the available sizes of valves, see *3.2.2 Technical data*.

Dimensions for tubes in DN

Metric DN	Outside diameter	Wall thickness	Inside diameter	Outside diameter acc. to DIN 11850
10	13	1.5	10	X
15	19	1.5	16	X
20	23	1.5	20	X
25	29	1.5	26	X
40	41	1.5	38	X
50	53	1.5	50	X
65	70	2.0	66	X
80	85	2.0	81	X
100	104	2.0	100	X
125	129	2.0	125	X
150	154	2.0	150	X

Table 16: Dimensions pipe DN

Dimensions for pipes in inch OD

Inch OD	Outside diameter	Wall thickness	Inside diameter	Outside diameter acc. to BS 4825
0.5"	12.7	1.65	9.4	X
0.75"	19.05	1.65	15.75	X
1"	25.4	1.65	22.1	X

Copyright @ GEA Tuchenhagen GmbH
2025 - All rights reserved

Inch OD	Outside diameter	Wall thickness	Inside diameter	Outside diameter acc. to BS 4825
1.5"	38.1	1.65	34.8	X
2"	50.8	1.65	47.5	X
2.5"	63.5	1.65	60.2	X
3"	76.2	1.65	72.9	X
4"	101.6	2.11	97.38	X
6"	152.4	2.77	146.86	X

Table 17: Dimensions pipe OD

Dimensions for tubes in Inch IPS

Inch IPS	Outside diameter	Wall thickness	Inside diameter	Outside diameter according to DIN EN ISO 1127
2"	60.3	2	56.3	X
3"	88.9	2.3	84.3	X
4"	114.3	2.3	109.7	X
6"	168.3	2.77	162.76	X

Table 18: Dimensions pipe IPS

3.2.6 Lubricants

Lubricant designation	Material no.
Rivolta F.L.G. MD-2 (1000 g)	413-071
Rivolta F.L.G. MD-2 (100 g)	413-136

Table 19: Lubricants

PUBLIC
Copyright @ GEA Tuchenhagen GmbH
2025 - All rights reserved

4 Storage and transport

This chapter contains information about transporting the valve. It also describes the minimum requirements for storage after delivery and for any necessary intermediate storage.

The target group of this chapter is all persons who carry out actions related to the transport or storage of the valve.

4.1 Scope of supply

On receipt of the valve check whether

- the details on the type plate correspond to the data in the order and delivery documents,
- the equipment is complete and all components are in good order.

4.2 Storage

The valves, valve inserts or spare parts should be stored in a dry place, free of vibration and dust, and protected from light. To avoid damage, leave the components in their original packaging if possible.

If, during transport or storage, the valve is going to be exposed to temperatures ≤ 0°C, it must be dried beforehand and suitable measures must be taken to protect it from damage.

INFO We recommend storing at a temperature of ≥ 5 °C for a period of 24 hours prior to any handling (removal of the housing / activation of actuators with compressed air) so that any ice crystals formed by condensation water can melt.

Copyright @ GEA Tuchenhagen GmbH
2025 - All rights reserved

4.3 Transport

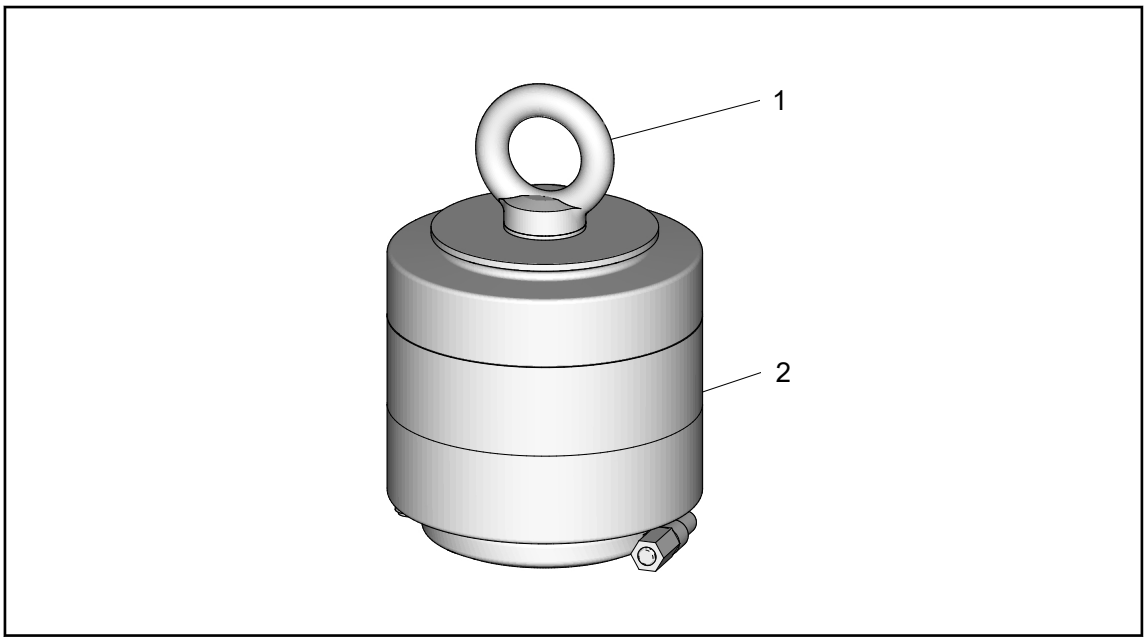

Figure 4-1 - Valve transport

For transport, the following principles apply:

- When transporting the valve be sure to unscrew the control top and the switch bar from the actuator (2) and use the screwed-in eye bolt (1) to lift the valve.
- Only use suitable hoist and slings for transporting the package units/valves.
- Observe the pictograms on the package.
- Handle valves with care to avoid damage caused by impact or careless loading and unloading. The outside synthetic materials are susceptible to breaking.
- Control tops must be protected from animal and vegetable fats.
- Only allow qualified staff to transport the valve.
- Movable parts must be properly secured.
- Only use approved, fully functional load lifting devices and lifting accessories which are suitable for the intended purpose. Observe the maximum load-bearing capacities.
- Secure the valve against slipping. Take the weight of the valve and the position of the point of gravity into account, see *3.2.2 Technical data*.
- Under no circumstances should anyone stand under a suspended load.
- Take care when transporting the valve. Do not grip sensitive parts of the unit to lift or push the unit or to support yourself. Avoid jerky movements when putting down the unit.

PUBLIC
Copyright @ GEA Tuchenhagen GmbH
2025 - All rights reserved

5 Assembly and installation

This chapter contains information and instructions about the assembly and installation of the valve.

The target group of this chapter is all persons who carry out actions related to the valve.

5.1 Notes on installation

Valve fitting position

The fitting position of the valve is upright. Steps must be taken to ensure that the valve housing and the pipe system can drain properly.

To avoid damage, ensure that the valve is installed into the pipe system without tension and no objects remain in the system after assembly (e.g. tools, screws, lubrication oils).

5.2 Control top

If different valves are operated via a control top, it must be ensured for each of the connected valves that the air supply does not fall below the required operating points.

5.3 Install the valve with detachable pipe connection elements

Prerequisites

- The pipe is drained, and cleaned or rinsed, if necessary.
- The pipe section for the valve to be mounted must be separated from the remaining pipe system.

1. Fit valves with detachable pipe connection elements – using suitable connection fittings – directly into the pipe system.

⇒ Valve is installed.

Copyright @ GEA Tuchenhagen GmbH
2025 - All rights reserved

5.4 Install valve with welding ends

Prerequisites

- The pipe is drained, and cleaned or rinsed if necessary.
- The pipe section for the valve to be mounted must be separated from the remaining pipe system.

⚠WARNING

Spring tension in the valve (NC)

Danger of injury when opening the clamp connections on the actuator or on the housing as the released spring pretension will suddenly lift the actuator.

- Therefore, release the spring tension before detaching the clamp connections by supplying the actuator with compressed air at max. 8 bar.

ATTENTION

Sensitive valve parts

Damage to the valve parts can lead to a malfunction.

- Protect the valve parts against impact stress.

ATTENTION

Welding distortions

The housing can warp during welding.

- Tack the pipe sockets of the housings without and gaps and tension to the pipe and housing and weld.

ATTENTION

Stray welding currents during welding

Can cause damage to electronic components

- For avoidance measures, see *Instructions for the Safe Handling of Electronic Components During Welding Work*.

1. Release the spring tension and remove the valve insert, see *9.5.2 Remove valve insert without control top from housing*.
2. Weld the housing, without seal rings, into position, ensuring that the connection is free of stress.
   - 2.1 Fit the housing into place and tack it. Take the installation position of the valve housing into account, see *9.7.2 Assembly of the housing combination*.
   - 2.2 Flush the housing with forming gas from the inside to push the oxygen out of the system.
   - 2.3 Weld the housing into the pipe system; use welding filler if necessary. Where technically possible, use the WIG-orbital welding process with pulse configuration, according to the EHEDG D.35 guideline.
3. Passivate the seam after welding.
4. Insert the seals.
   → When assembling the valve, always replace the housing O-rings to ensure that the valve is tight.

PUBLIC
Copyright @ GEA Tuchenhagen GmbH
2025 - All rights reserved

5. Install the valve insert and depressurise the actuator (A), see *9.7.5 Mount control top and insert valve insert into housing*.

⇒ Install the valve with welded ends.

INFO Welding method: We recommend using the automatic orbital welding method. All welding work should only be performed by certified welders or machine operators (orbital welders).

INFO When assembling the valve, always replace the housing O-rings to ensure that the valve is tight.

5.5 Electrical connection with T.VIS control top

⚠DANGER

Live parts

Electrical shocks can cause serious personal injuries or death.

- Only allow properly qualified staff to work on the electrical equipment.
- Prior to establishing electrical connections, check the maximum permissible operating voltage.

⚠DANGER

Explosive gases or dusts

An explosion can cause serious personal injuries or death.

- Observe the installation and operating regulations for use in potentially explosive areas!

Prerequisites

- Valve is installed

1. Connect the control top in accordance with the connection diagram and the instructions in the operating instructions for T.VIS control tops.

⇒ Control top is connected.

INFO The proximity switches are set ex-works. Settings can become changed during transport and installation and may need to be reset, see the instruction manual for the control top.

5.6 Checking the pneumatic connection

5.6.1 Air requirement

actuators

Nominal widths	Actuator (NC)	Air requirement actuator (NC) (dm^3_n /stroke)
IPS 2"	BB	0.26

Copyright @ GEA Tuchenhagen GmbH
2025 - All rights reserved

Nominal widths	Actuator (NC)	Air requirement actuator (NC) (dm^3_n /stroke)
DN 65, DN 80 OD 2 ½", OD 3" IPS 3"	DD	0.42
DN 100 OD 4" IPS 4"	EF	0.7
DN 125	EF6Z	3.16
DN 150 OD 6" IPS 6"	SG6Z	3.16

Table 20: Air requirement - actuator

*dm^3_n at 1.01325 bar at 0 °C according to DIN 1343

5.6.2 Establishing hose connections

INFO To ensure reliable operation, the compressed air hoses must be cut exactly at a right angle.

Tools

- Hose cutter

1. Shut off the compressed air supply.
2. Use the hose cutter to cut the pneumatic hoses at a right angle.
3. Push the air hose into the air connector on the control top.
4. Re-open the compressed air supply.

⇒ Hose connection has been established.

PUBLIC
Copyright @ GEA Tuchenhagen GmbH
2025 - All rights reserved

Hose connection diagram with T.VIS control top

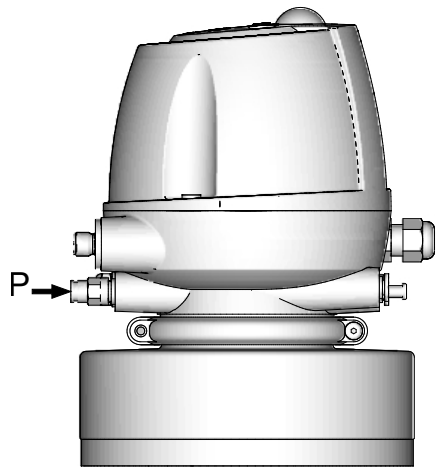

Figure 5-1 - Hose connection diagram

No.	Designation
A	Actuator
C	View C
P	Central air supply

Copyright @ GEA Tuchenhagen GmbH
2025 - All rights reserved

6 Commissioning

This chapter contains information for the initial and any subsequent commissioning of the valve. It also describes the necessary checks and tests.

The target group of this chapter is all persons who carry out actions related to the valve.

6.1 Preparing commissioning

For initial commissioning, the following principles apply:

- Take protective measures against dangerous contact voltages in accordance with pertinent regulations.
- The valve must be completely assembled and correctly adjusted. All screw connections must be securely tightened. All electrical cables must be installed correctly.
- Reliably secure machine parts which have already been connected against inadvertently being switched on.
- Relubricate all lubricating points.
- Make sure lubricants are used properly.
- After conversion of the valve, residual risks must be reassessed.

Notes on commissioning

Before starting commissioning observe the following:

- Make sure that there are no foreign materials in the system.
- Actuate the valve once by applying compressed air.
- Clean the pipe system prior to the first product run.
- During commissioning, regularly check all sealing points for leaks. Replace defective seals.

6.2 Restarting

The following principles apply for restarting:

- Only allow properly qualified staff to set the valve into operation.
- Make sure all connections are connected properly.
- The safety devices for the valve must be complete, fully functional and in perfect condition. Check the function before starting any work.
- When the valve is switched on, the danger zones must be free.
- Remove any liquids that have escaped without leaving residues.

Copyright @ GEA Tuchenhagen GmbH
2025 - All rights reserved

7 Operation and control

This chapter contains information on operating and shutting down the valve.

The target group of this chapter is the operators of the valve.

7.1 Monitoring operation

Dangerous situations during operation can be avoided by safety-conscious and proactive behaviour of the personnel.

For operation, the following principles apply:

- Monitor the valve during the operation.
- Safety devices must not be changed, removed or taken out of service. Check all safety devices at regular intervals.
- All guards and hoods must be mounted as intended.
- The place of installation of the valve must be adequately ventilated at all times.
- Structural alterations of the valve are not permitted. Immediately report any changes on the valve to the person responsible.
- Always keep danger zones clear. Do not leave any objects in the danger zone. Only allow persons to enter the danger zone when the machine is de-energized.
- Regularly check that all emergency stop devices are working correctly.

7.2 Shutdown

The following principles apply for shutdown:

- Switch off the compressed air.
- Switch off the valve.
- Padlock the main switch (if fitted) in the off position to prevent it from being switched back on. The key to the padlock must be deposited with the person responsible until the machine is restarted.
- In case of longer shut-downs, observe the storage conditions, see *4.2 Storage*.

Copyright @ GEA Tuchenhagen GmbH
2025 - All rights reserved

8 Cleaning

This chapter contains information about cleaning the valve. It also contains information about cleaning intervals and the use of cleaning agents.

The target group of this chapter is all persons who carry out actions related to cleaning the valve.

8.1 General

All parts in contact with product must be cleaned at regular intervals. Always observe the safety data sheets issued by the cleaning agent manufacturers. Only use cleaning agents which do not cause damage to the seals and the inner parts of the valve. When the pipe is cleaned, the cleaning medium also flows through and cleans the valve housings.

With respect to the cleaning method and parameters like detergents, temperatures, times, and intervals, the component manufacturer can merely make recommendations but cannot provide any generally applicable details. Method and parameters should be determined and defined by the operator in accordance with the relevant process and product.

The cleaning effect must be checked regularly by the operating company!

8.1.1 Cleaning process examples

Typical cleaning parameters in dairy operations

Example of a two-phase cleaning process:

- Sodium hydroxide solution and sodium hydroxide based combination products in concentrations from 0.5% to 2.5% at 75 °C (167 °F) to 80 °C (176 °F)
- Phosphoric or nitric acid, and combination products based thereon in the concentrations of 0.3 % to 1.5% at approx. 65 °C (149 °F).

Example of a cleaning operation in one cleaning step:

- Formic acid and formic acid-based combination products at up to 85 °C (185 °F).

Typical cleaning parameters in breweries

Example of a two-phase cleaning process:

- Sodium hydroxide solution and sodium hydroxide based combination products in concentrations of 1% to 4% at about 85 °C (185 °F).
- Phosphoric or nitric acid, and combination products based thereon in the concentrations of 0.3 to 1.5% at 20 °C (68 °F).

8.1.2 Cleaning results

The cleaning result depends on the following factors:

- Temperature
- Time
- Mechanics
- Chemicals
- Degree of soiling

These factors can be combined in such a way as to make an optimal cleaning result probable.

Copyright @ GEA Tuchenhagen GmbH
2025 - All rights reserved

8.2 Cleaning the leakage cavity

The cleaning of the leakage cavity is done by using a spray nozzle in the double-disk, which is connected to a valve seat cleaning line. Here too, only be general recommendations can be made as to the number and the duration of the spray cleaning cycles, which are all dependent on the conditions pertaining at each facility, including the type of product, temperatures, cleaning media, cleaning intervals, etc., which may require more frequent or longer spray cleaning cycles.

It is recommended to set the cleaning conditions in the system in a test phase, in order to save cleaning medium. To optimize cleaning of the seating, occasional checks of the valves after cleaning will determine whether the valve seats are clean.

All appropriate systems for cleaning the valve should be regularly used to that an optimal cleanliness is ensured and any damage to the valve is prevented. The spray cleaner cleans the leakage cavity, while product flow can flow in both lines, using a spray nozzle that distributes the CIP fluid throughout the leakage cavity. However, the seal surfaces of the valve disc seals are not cleaned with them.

This type of leakage cavity cleaning is often carried out with fluids which can be easily rinsed, and that do not stick to the seal surfaces or crystallize.

8.3 Passivation

Before a system with long pipes and tanks is commissioned, it usually needs to be passivated.

Valve blocks are usually excepted from this.

Passivation is usually carried out with nitric acid (HNO_3) at about 80 °C (176 °F) in a concentration of 3 % and a contact time of 6 to 8 hours.

Copyright @ GEA Tuchenhagen GmbH
2025 - All rights reserved

9 Maintenance

This chapter contains information about valve maintenance, inspection and repairs.

The target group of this chapter is all persons who carry out actions related to the valve.

9.1 Carrying out inspections

Between the maintenance periods, the valves must be checked for leakage and proper function.

9.1.1 Checking seals that come into contact with the product

Prerequisites

- Access to seals that come into contact with the product

1. Regularly check the seals that come into contact with the product:
   1.1 Check the upper seal ring (1) and lower seal ring (65).
   1.2 Check the O-rings (5) between the valve housings.
   1.3 Check the V-ring (7) and V-rings (8) in the valve disks.

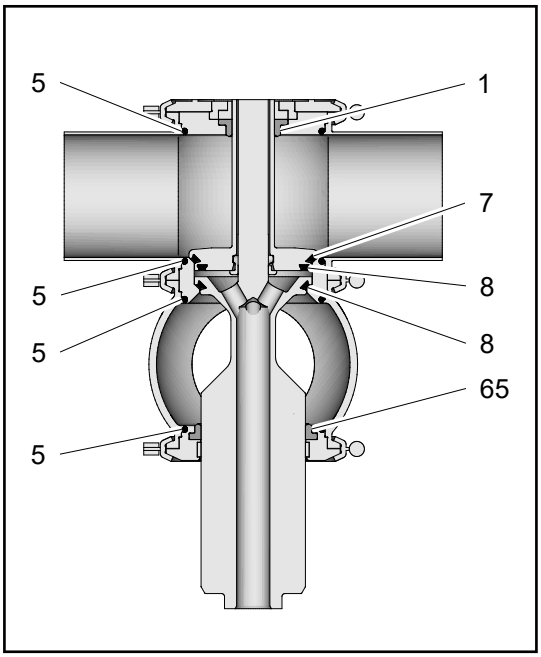

Figure 9-1 - Seals in contact with the product

⇒ Seals that come into contact with the product have been tested.

9.1.2 Checking the pneumatic connection

Prerequisites

- Access to the pneumatic connection

1. Check the operating pressure at the pressure reducing and filter station.
2. Regularly clean the air filter in the filter station.
3. Check that the air connections are tight.
4. Check the lines for kinks and leaks.
5. Check the solenoid valves for proper function.

⇒ The pneumatic connection has been checked.

PUBLIC
Copyright @ GEA Tuchenhagen GmbH
2025 - All rights reserved

9.1.3 Checking the electrical connection

Prerequisites
- Access to the electrical connection

1. Check that the union nut on the cable gland is tight
2. Check that the cable connections are firmly secured.
3. Check the solenoid valves for proper function.
4. Check that the proximity switch connections are clean.

⇒ The electrical connection has been checked.

INFO The electrical cable must be long enough to allow the control top to be removed via the switch bar!

9.1.4 Checking the signs on the valve

Prerequisites
- Valve is accessible

1. Check the signs on the valve, see also *2.9 Safety signs*.
2. If necessary, replace damaged or missing labels with new labels.

⇒ The signs on the valve have been checked.

9.2 Servicing intervals

To ensure the highest operational reliability, all wearing parts should be replaced at longer intervals.

The actual servicing intervals can only be determined by the operating company since they depend on the operating conditions, for instance:

- Daily period of use
- Switching frequency
- Type and temperature of the product
- Type and temperature of the cleaning solution
- Ambient conditions

Servicing intervals

Applications	Servicing Intervals (Guideline Values)
Media at temperatures of 60 °C to 130 °C (140 °F to 266 °F)	approx. every 3 months
Media at temperatures of < 60 °C (< 140 °F)	approx. every 12 months

Copyright @ GEA Tuchenhagen GmbH
2025 - All rights reserved

9.3 List of tools

Tool	Intended Purpose	Material no.
Belt wrench	Removing/mounting the actuator	408-142
Torque wrench bit 6.3 (1-5 Nm)	Half-rings assembly / control top assembly	408-449
Torque wrench ¼" (2.5-25 Nm)	Fitting the clamp connection	408-424
Torque wrench size for plug-in tool size 1 (2.5-25 Nm)	Valve disk/switch bar assembly	408-494
Torque wrench for plug-in tool size 2 (20-120 Nm)	Mounting the valve disk	408-426
Bit 6.3-PH2 Philips 89 mm	Hood T.VIS removal / mounting	408-459
Bit 6.3 size 3 hex 89 mm	Removing / mounting control top T.VIS	408-469
V-ring insertion tool	Mount the V-rings	229-109.88
Articulated face spanner with journal 4 mm	Removing/mounting the installation base	408-197
Sickle spanner with journal 25/28 (3 mm) for DN 25	Removing/mounting the actuator Holding the carrier sleeve tight	408-203
Sickle spanner with journal 30/32 (4 mm) for DN 50 to DN100	Removing/mounting the actuator Holding the carrier sleeve tight	408-202
Sickle spanner with journal 34/36 (4 mm) for DN 125, 6"IPS	Removing/mounting the actuator Holding the carrier sleeve tight	408-204
Sickle spanner with journal 45/50 (5 mm)	Removing/mounting the actuator Holding the carrier sleeve tight	408-205
Allen key 3 mm	Removing/mounting the half-rings T.VIS	408-121
Open end insertion tool SW 13	Mounting the switch bar	408-452
Jaw plug-in tool adjustable size 2	Valve disk/double-disk assembly	408-172
Jaw wrench ground a/f 17x19	Removing the valve disk	229-119.01
Jaw wrench ground a/f 21x23	Removing the valve disk	229-119.05
Jaw wrench ground a/f 22x24	Removing the valve disk	229-119.03
Jaw wrench a/f 10x11	Remove clamp connection	408-033
Jaw wrench a/f 12x13	Remove clamp connection	408-034
Jaw wrench A/F 30x32	Removing the valve disk	408-041
Installation mandrel	Fitting the lifting actuator	221-105.76 221-105.77
Installation mandrel 6 mm	Removing the valve disk	403-211

PUBLIC
Copyright @ GEA Tuchenhagen GmbH
2025 - All rights reserved

Tool	Intended Purpose	Material no.
Mounting device DN 40 / DN 50 DN 65 / DN 80 DN 100 DN 125 / DN150 / 6" IPS	Additional disk disassembly / assembly	229-109.10 229-109.12 229-109.15 229-109.21
Pick-Set	Removing the seals	221-007248
Eyebolt T.VIS	Transporting the valve Removing the valve	221-104.98
Hexagon nut M14	Transporting the valve Removing the valve	910-036
Hose cutter	Cutting the pneumatic hoses to size	407-065
Screwdriver crosstip size 2	Removing/mounting the hood	406-125
Socket for wrench 1/4" a/f 10	Fitting the clamp connection	408-477
Socket for wrench 1/4" a/f 13	Fitting the clamp connection (from DN40)	408-425

Table 21: List of tools

https://assets.gea.com/gea/action/viewAsset?id=340663&index=8&total=133&view=viewSearchItem

Link to service catalogues "Maintenance of valves and pumps"

9.4 Prior to removal

Prerequisites

- Ensure that no active processes are running in the relevant area during maintenance and servicing work .

1. Drain all pipe system elements that lead to the valve and, if necessary, clean or rinse them.
2. Disconnect the power supply.
3. Take the valve out of the pipe section, with all housings and housing connections if possible.

9.5 Removing the valve

The following description refers to a standard-version valve with control top T.VIS.

INFO For valves without control top, refer to *9.5.2 Remove valve insert without control top from housing*.

The design, tools used and torques required can deviate from the description for other nominal widths. The relevant information can be found in these operating instructions.

The use of a workbench with vice is recommended.

Copyright @ GEA Tuchenhagen GmbH
2025 - All rights reserved

9.5.1 Remove control top and withdraw valve insert from housing

Prerequisites

- The pneumatic and electrical connections on the plant side can remain on the control top.

⚠WARNING

Spring tension in the valve (NC)

Danger of injury when opening the clamp connections on the actuator or on the housing as the released spring pretension will suddenly lift the actuator.

- Therefore, release the spring tension before detaching the clamp connections by supplying the actuator with compressed air at max. 8 bar.

ATTENTION

The shaft of the valve disc and double disk are sealing surfaces and must not be damaged.

Damage to these parts can cause malfunction.

- Carefully remove valve disk and double disc from housing.

ATTENTION

The switch bar is sensitive and must be protected from impact stress.

Damage to switch bar.

- Protect the switch bar against impact stress.

1. Loosen the cleaning hose.

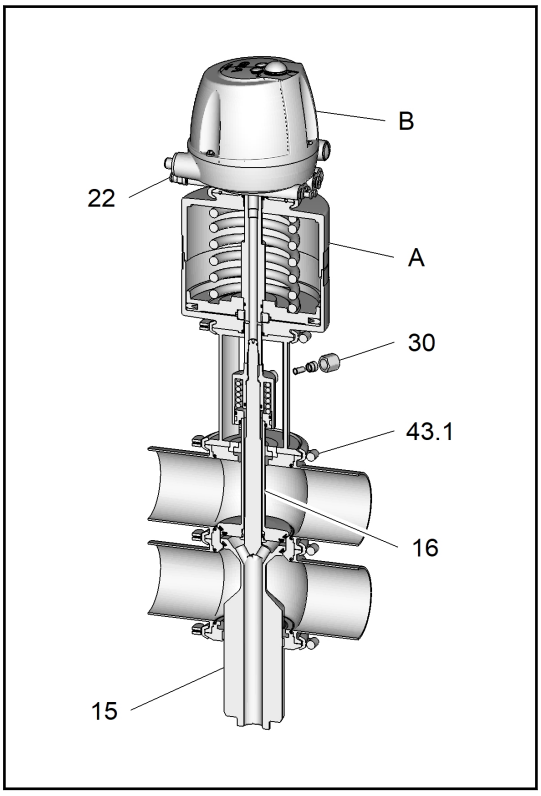

PUBLIC
Copyright @ GEA Tuchenhagen GmbH
2025 - All rights reserved

2. Release the Philips screws (25) and take off the cap (7).
3. Pressurize the actuator with compressed air (max. 8 bar) - by activating the solenoid valve (Y1) at the manual operating element (S).
   → The valve disk (V15) is raised.
   INFO Alternatively, the solenoid valve (Y1) can also be actuated by the plant-side central controller provided by the plant operator. This is particularly beneficial if several valves are to be actuated at the same time.

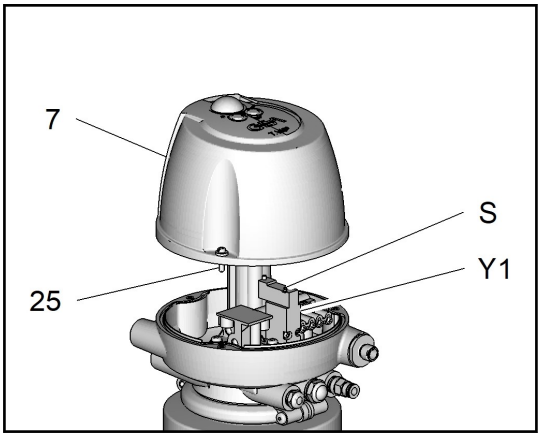

4. **ATTENTION**
   Before fully removing clamp connection (43), ensure the valve is depressurised.
   - To do this, loosen but do not remove clamp connection (43).
   - Then check if the valve insert can move freely within housing (402). This is only possible if the valve is fully depressurised.
   - Then remove clamp connection (43) between housing (402) and lantern (L).
5. Depressurize the actuator (A) by deactivating the solenoid valve (Y1) at the manual operating element (S).
   → The valve disk (V15) is lowered and the valve insert is pushed out of the housing (402).
6. Release the clamp connection (B12) and pull the control top (B) up and off. The feedback signal of the control system is interrupted. For further information see "Operating instructions for control tops".
   → Control top is removed.
7. Unscrew and remove the switch bar (1) using a jaw wrench (1.2).

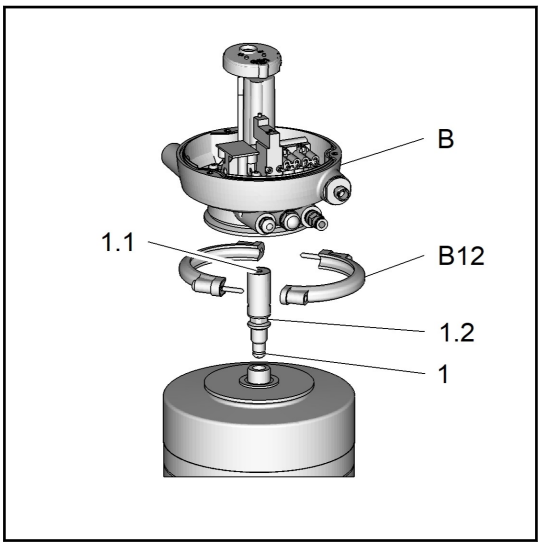

Figure 9-2 - Removing the control top

Copyright @ GEA Tuchenhagen GmbH
2025 - All rights reserved

8. Carefully remove the valve insert out of the housing (402).

→ The valve insert has been disconnected from the housing.

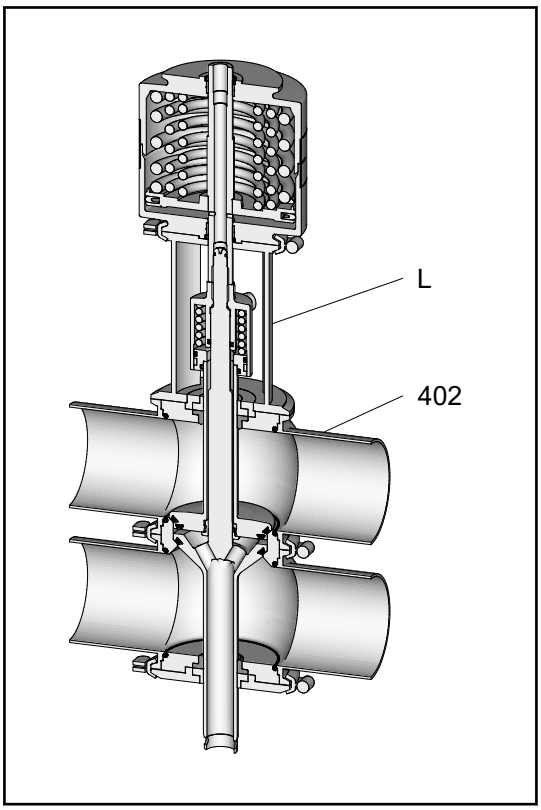

⇒ The control top is removed and the valve insert is disconnected from the housing.

PUBLIC

Copyright @ GEA Tuchenhagen GmbH
2025 - All rights reserved

9.5.2 Remove valve insert without control top from housing

Connection 0 – with angled push-in fitting (W)

Prerequisites

- Connection "0" is present

⚠WARNING

Spring tension in the valve (NC)

Danger of injury when opening the clamp connections on the actuator or on the housing as the released spring pretension will suddenly lift the actuator.

- Therefore, release the spring tension before detaching the clamp connections by supplying the actuator with compressed air at max. 8 bar.

ATTENTION

The shaft of the valve disc and double disk are sealing surfaces and must not be damaged.

Damage to these parts can cause malfunction.

- Carefully remove valve disk and double disc from housing.

1. Disconnect cleaning hose (R).
2. Pressurise actuator (A) at (Y) with compressed air (max. 8 bar).
   → The valve disk (V15) is raised.
3. **ATTENTION**
   Before fully removing clamp connection (43), ensure the valve is depressurised.
   - To do this, loosen but do not remove clamp connection (43).
   - Then check if the valve insert can move freely within housing (402). This is only possible if the valve is fully depressurised.
   - Then remove clamp connection (43) between housing (402) and lantern (L).
4. Depressurise actuator (A) at (Y).
   → The valve disk (V15) is lowered and the valve insert is pushed out of housing (402).
5. Loosen and remove clamp connection (B12) at actuator cover (138).
6. Loosen air connection (117) with open-ended spanner and unscrew.
7. Remove actuator cover (138) with air connection (117) from actuator.
8. Carefully remove the valve insert out of the housing (402).

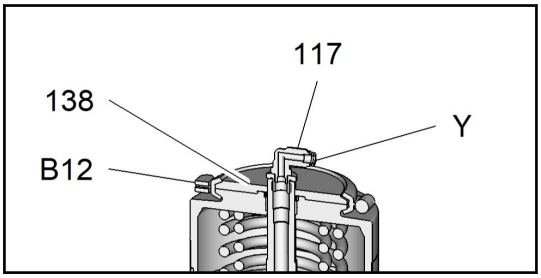

Figure 9-3 - Valve with connection 0 [angled push-in fitting (W)]

⇒ The valve insert has been disconnected from the housing.

Copyright @ GEA Tuchenhagen GmbH
2025 - All rights reserved

Connection INA – Initiator mounting on actuator

Prerequisites

- Connection "INA" is present

⚠WARNING

Spring tension in the valve (NC)

Danger of injury when opening the clamp connections on the actuator or on the housing as the released spring pretension will suddenly lift the actuator.

- Therefore, release the spring tension before detaching the clamp connections by supplying the actuator with compressed air at max. 8 bar.

ATTENTION

The shaft of the valve disc and double disk are sealing surfaces and must not be damaged.

Damage to these parts can cause malfunction.

- Carefully remove valve disk and double disc from housing.

1. Disconnect cleaning hose (R).
2. Pressurise actuator (A) at (Y) with compressed air (max. 8 bar).
   → The valve disk (V15) is raised.
3. **ATTENTION**
   Before fully removing clamp connection (43), ensure the valve is depressurised.
   - To do this, loosen but do not remove clamp connection (43).
   - Then check if the valve insert can move freely within housing (402). This is only possible if the valve is fully depressurised.
   - Then remove clamp connection (43) between housing (402) and lantern (L).
4. Depressurise actuator (A) at (Y).
   → The valve disk (V15) is lowered and the valve insert is pushed out of housing (402).
5. Loosen and remove clamp connection (B12) at actuator cover (138).
6. Unscrew and remove the air connection (246) with a jaw wrench.
7. Remove actuator cover (138) and initiator mounting INA (243) from actuator (A).
8. Carefully remove the valve insert out of the housing (402).

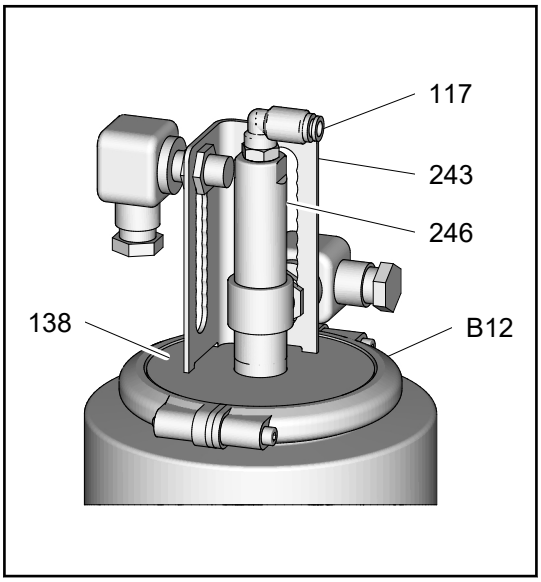

Figure 9-4 - Valve with connection INA [initiator mounting on actuator]

⇒ The valve insert has been disconnected from the housing.

PUBLIC
Copyright @ GEA Tuchenhagen GmbH
2025 - All rights reserved

9.5.3 Separating the valve insert from the actuator

Prerequisites

- The valve insert has been disconnected from the housing.

Tools

- Jaw wrench
- Belt wrench

ATTENTION

The surfaces of the valve disc are product-contact and must not be damaged.
Damage to these parts can result in malfunction.

- Bearing and sealing washers must not strike the double disc shaft during removal.

1. Loosen the clamp connection (46) between actuator (A) and lantern (L).
2. Apply the jaw wrench to the valve disk (15) at (11) and undo the actuator (A) with belt wrench.
3. Turn the actuator (A) off the valve insert by hand.

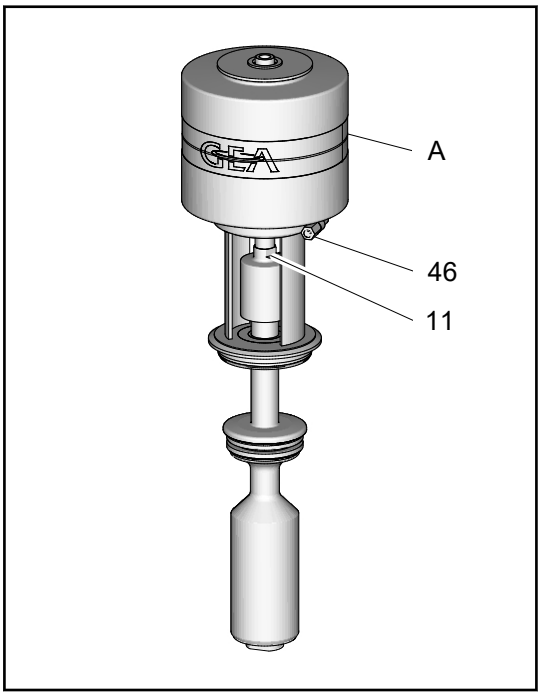

Copyright @ GEA Tuchenhagen GmbH
2025 - All rights reserved

4. Carefully remove the lantern (L) from the valve insert.

→ While doing this, tilt the lantern over the bonnet (11) and pull it upwards at an angle.

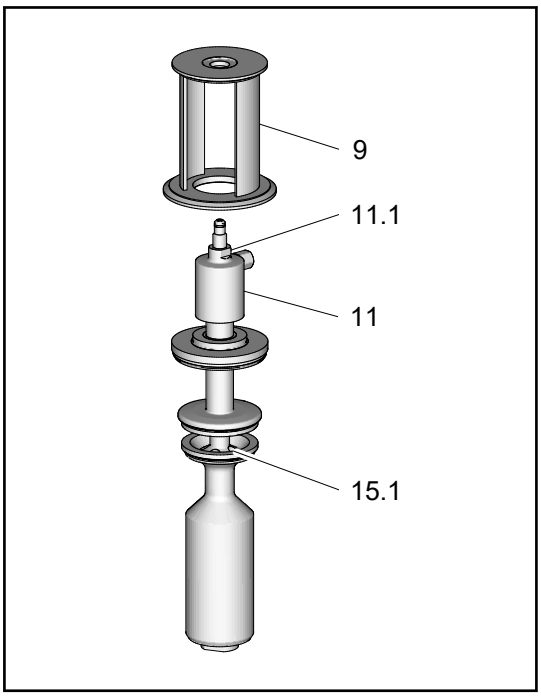

5. While doing this, tilt the lantern over the bonnet (11) and pull it upwards at an angle.

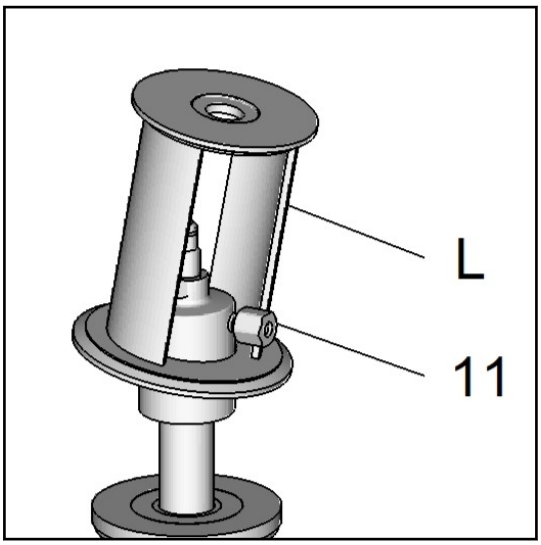

⇒ The valve insert has been removed from the actuator.

PUBLIC
Copyright @ GEA Tuchenhagen GmbH
2025 - All rights reserved

9.5.4 Dismantling the valve insert

Prerequisites

- The valve insert is disconnected from the actuator (A) and lantern (L).

Tools

- Vice mount

ATTENTION

The surfaces of the valve disc are product-contact and must not be damaged.
Damage to these parts can result in malfunction.

- Bearing and sealing washers must not strike the double disc shaft during removal.

1. Clamp the vice mount in the vice. Insert the valve insert loosely into the suitable opening and fix with one hand.
2. Apply the jaw wrench to the bonnet (11) at (11.1) and loosen it.
3. Unscrew the cleaning hood (11) from the valve disk.
4. Remove the compression spring (18) from the double-disk (16).
5. Disconnect the double-disk (16) from the valve disk (15).
6. Remove the bearing plug (12), bearing disk (4) with bearing (2) as well as the seal ring (1) with seal disk (3) from the double-disk (16).

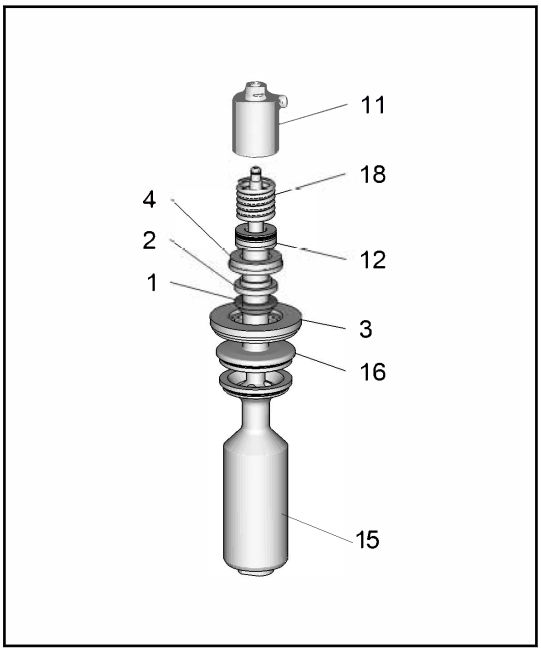

⇒ Valve insert has been disassembled.

Copyright @ GEA Tuchenhagen GmbH
2025 - All rights reserved

9.5.5 Dismantling of the housing combination

Prerequisites

- Loose housing combination available

Tools

- Jaw wrench, a/f 10 / a/f 13

1. Remove the clamp connection (43) between the housings and the seat ring (34).
   → O-rings (5) are accessible
2. Loosen the clamp connection (43) on the lower housing and remove the balancer plug (92) with guide ring (66) and seal ring (65).

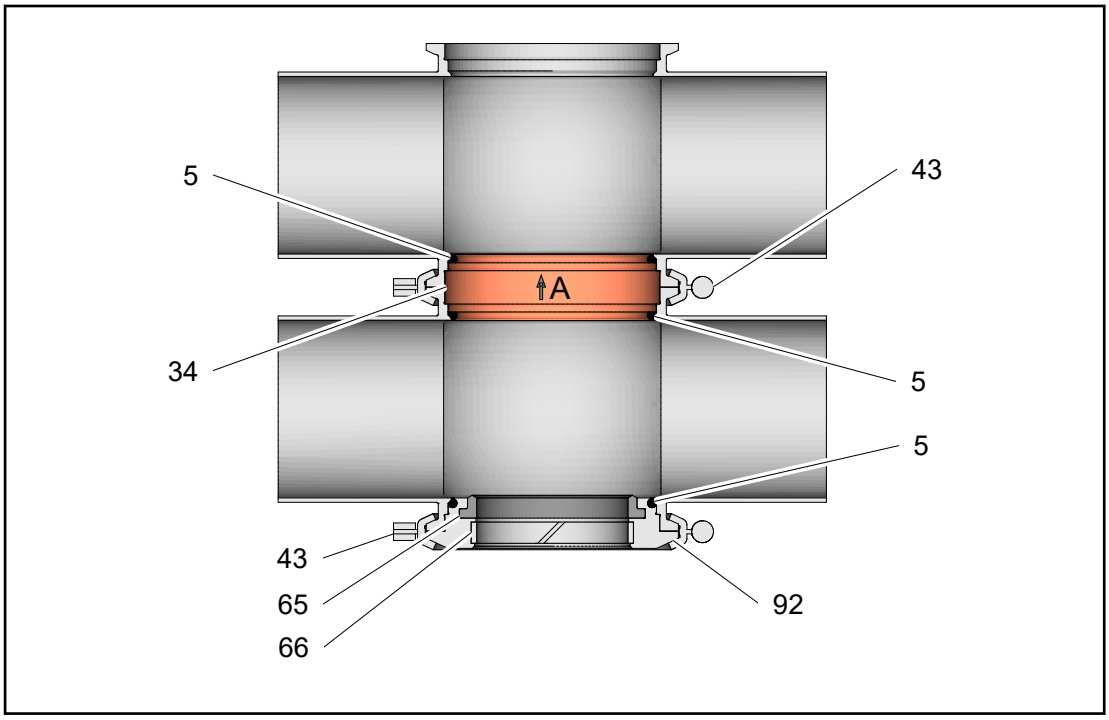

Figure 9-5 - Housing combination

⇒ Housing combination is disassembled.

PUBLIC
Copyright @ GEA Tuchenhagen GmbH
2025 - All rights reserved

9.6 Maintenance

9.6.1 Cleaning the valve

Prerequisites

- The valve has been removed, see *9.5 Removing the valve*.

ATTENTION

Damage to precision areas

The stem of the valve disk, the housing seat, the valve insert and the V-ring groove are precision parts. Damage to these valve components can lead to malfunction.

- Handle the valve with care!

ATTENTION

Damage to the valve

Damage to the valve parts can result in a malfunction.

- Observe the safety information sheets issued by the detergent manufacturers!
- Only use detergents which are non-abrasive and not aggressive towards stainless steel.
- Use only cleaning mediums which do not damage the materials of the control top (PPE, PA).

1. Carefully clean the individual parts.

⇒ The valve has been cleaned.

INFO Observe the safety data sheets supplied by the detergent manufacturers. Only use detergents which are non-abrasive and not aggressive towards stainless steel.

9.6.2 Replacing seals

INFO Replace defective seals, but always fit new housing O-rings to ensure the tightness of the valve. Always use genuine spare parts.

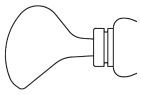

V-ring insertion tool

Copyright @ GEA Tuchenhagen GmbH
2025 - All rights reserved

Prerequisites

- The valve has been removed, see *9.5 Removing the valve*.
- V-ring groove must be clean and dry.
- Insert V-Ring without grease.

Tools

- Pickset
- V-ring insertion tool
- Vice support

⚠CAUTION

Sharp-edged tool

Risk of injury if the pickset tool slips when removing the V-ring.

- Clamp the valve disk with the vice mount into the vice.

INFO Functional and running surfaces of the valves may not be damaged.

INFO Do not grease the V-ring. To facilitate fitting, use water with a drop of washing-up liquid to remove the surface tension. To ensure that no rust is transferred, the washing-up liquid solution must be mixed in a ceramic, plastic, or stainless steel container.

1. Put a tool from the pickset into the V-ring and take it out.

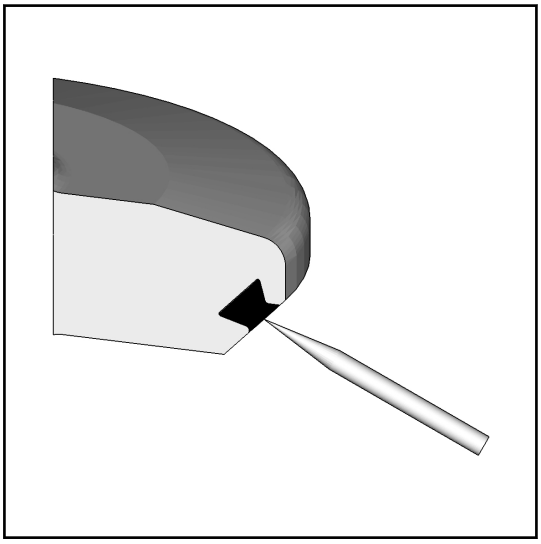

2. Check the V-ring groove: it must be clean and dry.
3. Wet the V-ring with water before fitting.
4. Put in the V-ring. Make sure the installation position of the V-ring is correct.

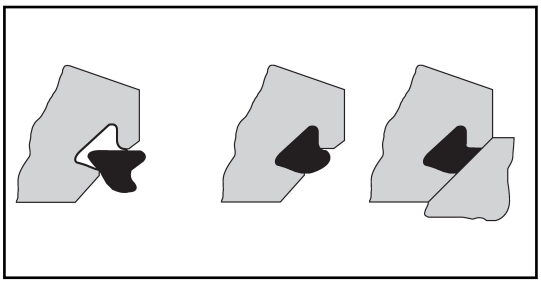

PUBLIC

Copyright @ GEA Tuchenhagen GmbH
2025 - All rights reserved

5. Use the insertion tool to press in the V-ring – press in evenly at several opposite points along the circumference.

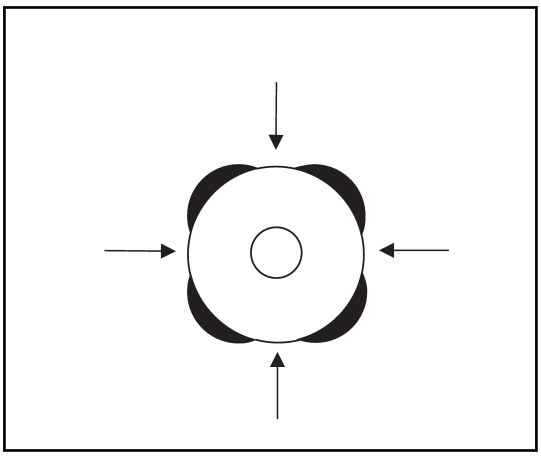

6. Insert the V-ring evenly.

⇒ V-ring has been exchanged.

INFO Used seals must not be used again, since the proper function of the seal can then no longer be ensured.

Copyright @ GEA Tuchenhagen GmbH
2025 - All rights reserved

Replacing more seals

Prerequisites

- The valve has been removed, see *9.5 Removing the valve*.

INFO For nominal widths up to DN 50 or 2”, different seals may be required. For further details and small nominal width please refer to the spare parts list.

INFO Used seals must not be used again, since the proper function of the seal can then no longer be ensured.

1. Insert all other seals.

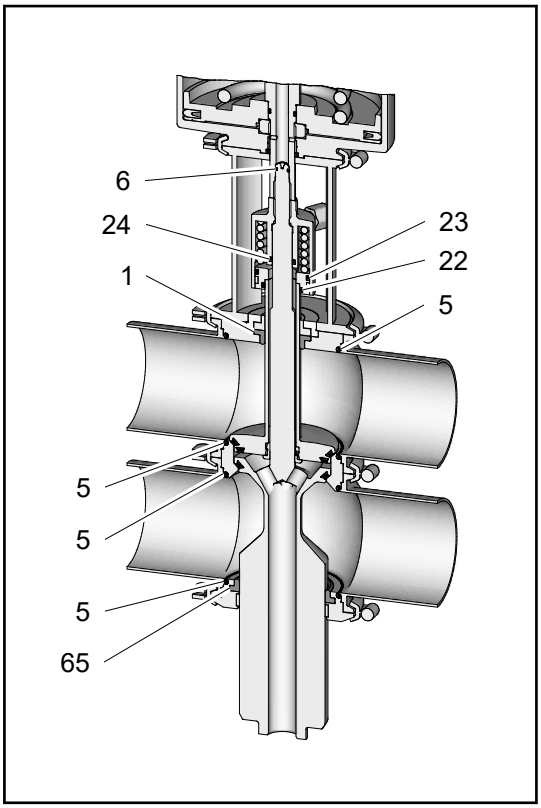

Figure 9-6 - Other Seals

PUBLIC
Copyright @ GEA Tuchenhagen GmbH
2025 - All rights reserved

9.6.3 Lubricating seals and threads

Prerequisites

- The valve has been removed, see *9.5 Removing the valve*.

Tools

- Lubricants Rivolta F.L.G. MD-2 and PARALIQ GTE

ATTENTION

Damage to seals and threads

Stainless steel threads tend to seize and stick, and must be greased. Damage to seals and threads can result in malfunction.

- Ensure that an adequate film of lubricant is applied. No grease residues must be visible once the valve has been assembled completely.
- For product contact seals only use suitable greases and oils.
- Observe the safety data sheets issued by the lubricant manufacturer.

1. Apply a light film of lubricant to all threads.
2. Grease all seals – including the O-rings at the top and bottom of the actuator piston stem – very thinly.
   → Do not grease the V-ring.
3. Grease the inside of the seal ring (1) (contact surface).

⇒ Seals and threads have been lubricated.

INFO GEA Tuchenhagen recommends Rivolta F.L.G. MD-2 and PARALIQ GTE 703. These lubricants are approved for foodstuff and are resistant to beer froth. They have the NSF-H1 (USDA H1) registration. They do not affect the taste or the consistency of the products and are compatible with the seals in contact with product. Rivolta F.L.G. MD-2 can be ordered from GEA Tuchenhagen. Using other types of grease can result in malfunctions or in premature seal failure. The warranty will also become null and void. A Manufacturer's Declaration for these products can be obtained from GEA Tuchenhagen if required. A thin film of grease is required on the seals to ensure the proper function of the fittings. It reduces friction and extends the service life of the seals. This is absolutely harmless from a health and hygienic point of view. Running dry must be avoided!

9.7 Installing the valve

General notes

The following description refers to a standard-version valve with control top T.VIS.

INFO For valves without control top, refer also to *9.7.6 Insert valve insert into housing without control top*.

The design, tools used and torques required can deviate from the description for other nominal widths. The relevant information can be found in these operating instructions.

The use of a workbench with vice is recommended.

It is assumed that all the seals have already been replaced. Refer in this contact to the chapter on maintenance: *9.6.2 Replacing seals*

Copyright @ GEA Tuchenhagen GmbH
2025 - All rights reserved

9.7.1 Tightening torques

Tighten the following valve connections to the torques specified in the table.

Tightening torques		[Nm]	[lbft]
Clamps on the control top		1	0.7
Clamp connection cast half rings	M6	8	5.9
	M8	15	11
	M10	45	33
Valve disk	M8	22	16.2
	M14	80	59
	M18	95	70
Double-disk	M18x2	40	29
	M24x2	50	37
	M30x2	60	44
Cleaning hood	M14	80	59
	M18	95	70
Switch bar	M14	2-2.5	1.5-1.8

PUBLIC
Copyright @ GEA Tuchenhagen GmbH
2025 - All rights reserved

9.7.2 Assembly of the housing combination

Prerequisites

- Loose housing combination available

Tools

- Torque wrench ¼" (2.5-25 Nm)
- Socket for wrench ¼" a/f 13

ATTENTION

Pay attention to the installation direction of the seat ring.
If installed incorrectly, the valve will not work correctly.

- The seat ring is marked with an arrow indicating the installation direction.
- Install the seat ring with the arrow pointing towards the actuator.

1. Equip seat ring (34) with O-rings (5) and place between the housings with arrow direction facing the actuator.
2. Mount the clamp connection (43) between the housings.
   → Ensure that the clamp connection (43) is firmly installed using the required torque.
3. Place the balancer plug (92) with seal ring (65) and guide ring (66) in the lower housing.
4. Mount the clamp connection (43) between the lower housing and balancer plug (92).
   → Ensure that the clamp connection (43) is firmly installed using the required torque.

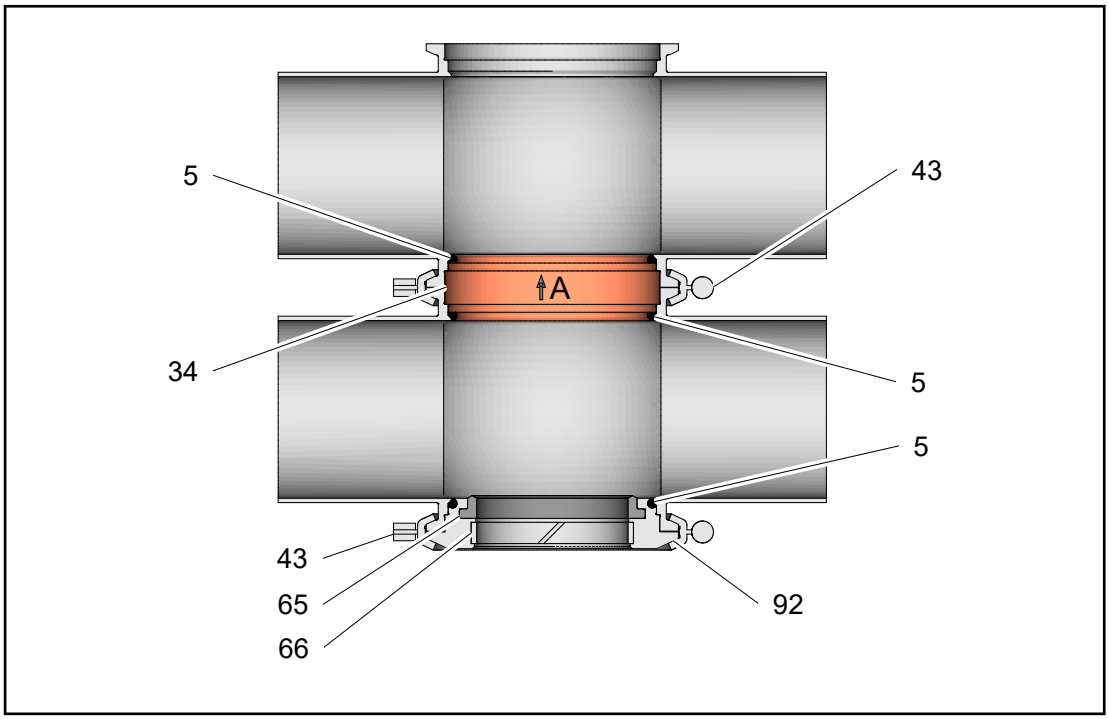

Figure 9-7 - Housing combination with seat ring with marked installation direction

Copyright @ GEA Tuchenhagen GmbH
2025 - All rights reserved

5. Then check whether the seat ring D (34) has been inserted properly.

→ The marked sealing faces must be able to be recognised and sit straight between the housings.

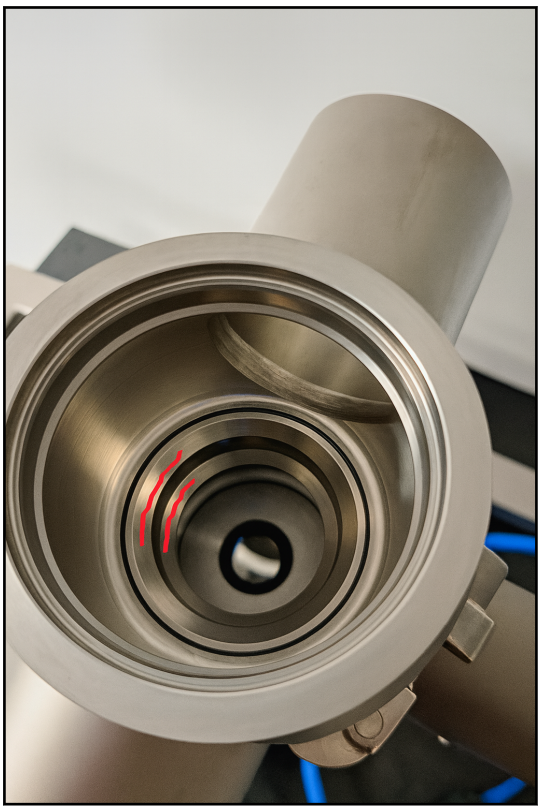

⇒ Housing combination is assembled.

PUBLIC

Copyright @ GEA Tuchenhagen GmbH
2025 - All rights reserved

9.7.3 Assembling the valve insert from individual parts

Prerequisites

- The maintenance work on the valve has been completed.
- All parts of the valve have been cleaned.
- All seals have been replaced.
- All threads have been lightly greased.

Tools

- Jaw wrench
- Jaw plug-in tool adjustable
- Torque wrench
- Hook wrench

ATTENTION

The surfaces of the valve disc and double disc are product-contact and must not be damaged.

Damage to these parts can result in malfunction.

- Components must not strike the shaft of the double disk.

1. Clamp the vice mount in the vice and insert the double-disk (V16) loosely into the suitable opening.
2. Guide the seal disk (3) over the rod of the double-disk (V16). The push the seal ring (1) onto the double-disk (V16) and place in the seal disk (3).
   → Make sure that the seal ring (1) does not become damaged.
3. Guide the bearing disk (4) with bearing (2) over the rod of the double-disk (V16).
4. Then place the double-disk (V16) on the valve disk (V15).
   → First check whether the cleaning nozzle (74) can rotate in the double-disk (V16).
5. Grease the bearing plug (12) with guide ring (19) and guide it over the rod of the double-disk (V16).
   → Make sure that the guide ring (19) is facing down in the bearing plug (12).
6. Grease the spring (18) and position it on the double-disk (V16). Then screw the bonnet (11) onto the double-disk (V16).
   → Make sure that the guide ring (19) remains in position.

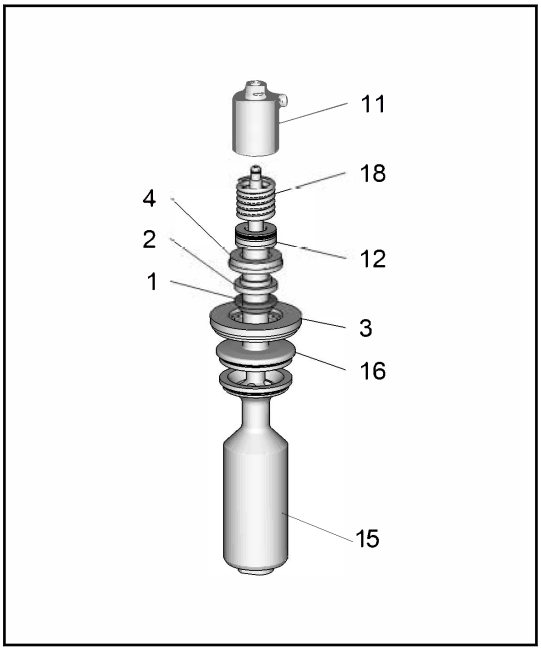

Figure 9-8 - Valve insert

⇒ The valve insert is assembled from individual parts.

Copyright @ GEA Tuchenhagen GmbH
2025 - All rights reserved

9.7.4 Assemble valve insert with actuator

Prerequisites

- Valve insert has been fitted.

Tools

- Mounting tool VT
- Pin punch with handle 6 mm
- Belt wrench

ATTENTION

The surfaces of the valve disc and double disc are product-contact and must not be damaged.

Damage to these parts can result in malfunction.

- Components must not strike the shaft of the double disk.

1. Guide the lantern (9) carefully over the valve insert.

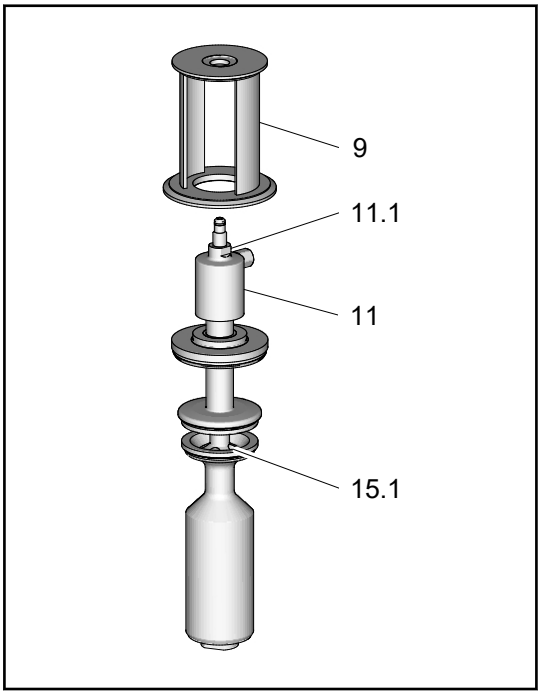

PUBLIC

Copyright @ GEA Tuchenhagen GmbH
2025 - All rights reserved

2. While doing so, tilt the lantern (9) at an angle and guide it over the bonnet (11) from above.

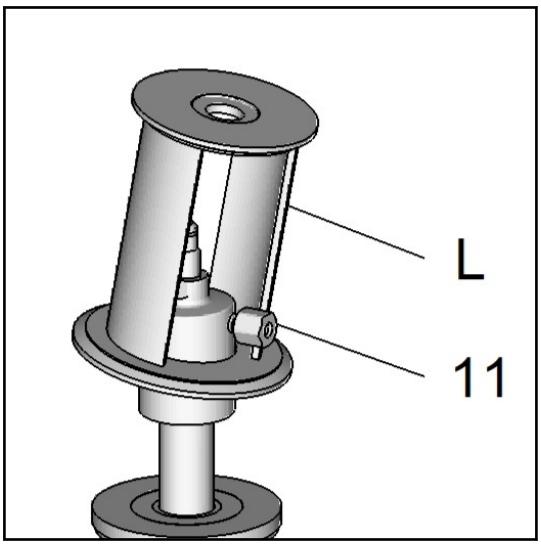

3. Place the actuator (A) on the valve insert and connect with the bonnet.
4. Then fix the actuator (A) with belt wrench and screw the valve insert at (11) using the jaw wrench.
5. Mount the clamp connection (46) between the actuator (A) and the lantern (9).
   → Ensure that the clamp connection (46) is firmly installed using the required torque.

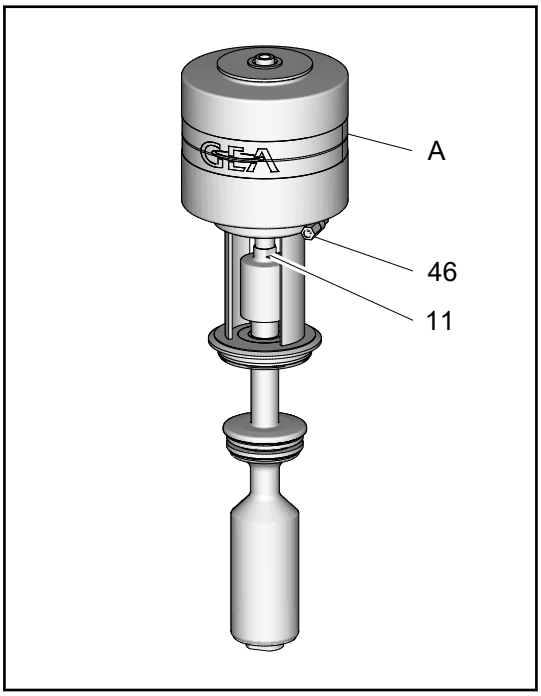

⇒ The valve insert is assembled with actuator.

Copyright @ GEA Tuchenhagen GmbH
2025 - All rights reserved

9.7.5 Mount control top and insert valve insert into housing

Prerequisites

- The valve insert is assembled with actuator

ATTENTION

The shaft of the valve disc and double disk are sealing surfaces and must not be damaged.

Damage to these parts can cause malfunction.

- Carefully insert valve disc and double disc into the housing.

ATTENTION

The permanent magnet on the switch bar is fragile.

Damage to the permanent magnet.

- Protect the permanent magnet against impact stress.

1. Guide the valve insert carefully through the upper housing (402) until the seal disk (V5) with seal ring (V1) fits snugly in the upper housing (402).

→ The valve insert has been inserted into the housing.

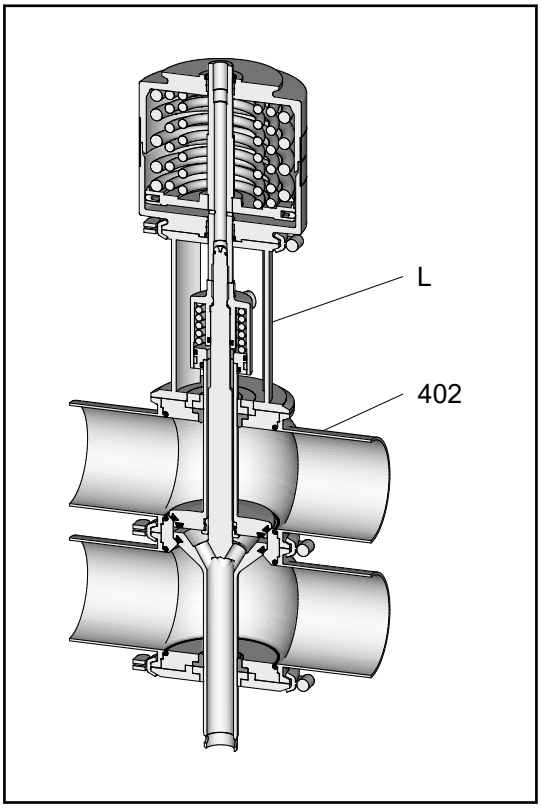

Figure 9-9 - Valve insert in the housing

PUBLIC

Copyright @ GEA Tuchenhagen GmbH
2025 - All rights reserved

2. Screw the switch bar (1) into the piston rod and tighten with torque.
3. Place the control top (B) onto the actuator (A) from above.
4. Fit the hinged clamp (B12) to the control top (B) and tighten with torque.
   → Control top is fitted.

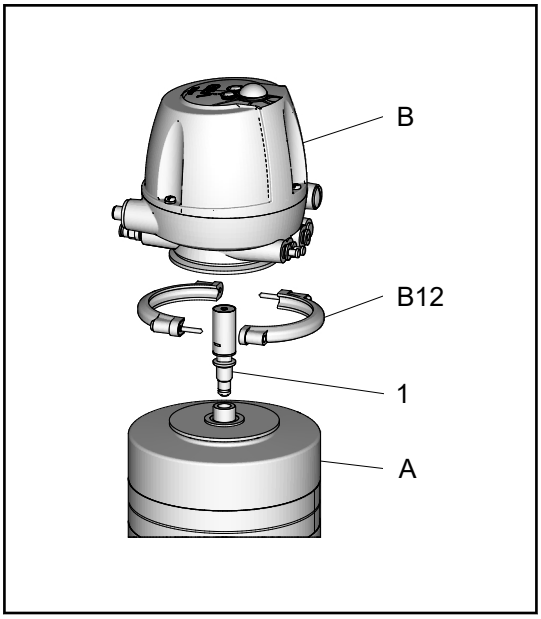

Figure 9-10 - Fitting the control top

5. Pressurize the actuator (A) with compressed air (max. 8 bar) - by activating the solenoid valve (Y1) at the manual operating element (S).
   → The valve disk (V15) is lifted, the valve insert is lowered into the housing (402).
6. Mount lantern (L) with clamp connection (43) to the upper valve housing.
   → Ensure that the clamp connection (43) is firmly installed using the required torque.
7. Depressurize the actuator (A) again by deactivating the solenoid valve (Y1) at the manual operating element (S).
   → The valve disk (V15) is lowered.
8. Place the hood (7) on the control top (B) and fasten using Philips screws (25).

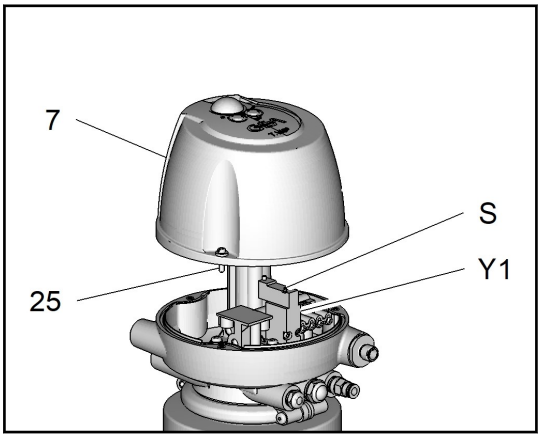

Copyright @ GEA Tuchenhagen GmbH
2025 - All rights reserved

9. **INFO**

Before the hood (7) is fixed in place, check the valve stroke. Refer here to *9.7.8 Checking the function*

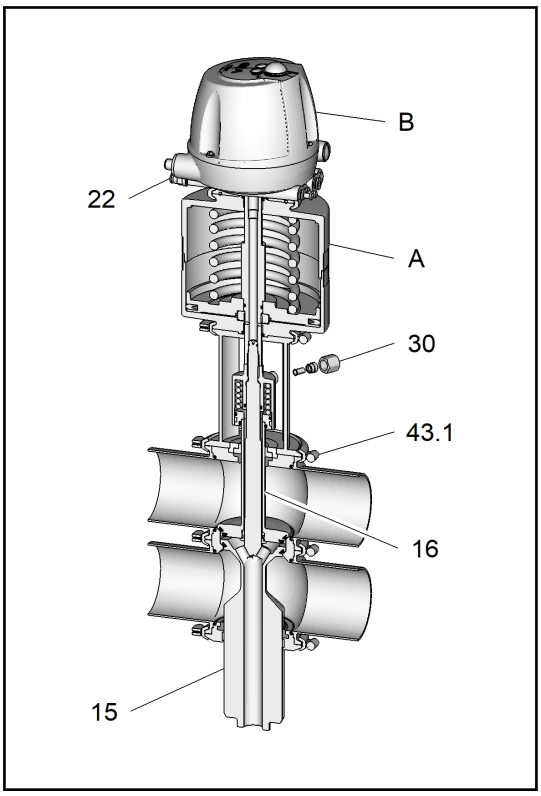

⇒ Valve has been completely assembled.

PUBLIC

Copyright @ GEA Tuchenhagen GmbH
2025 - All rights reserved

9.7.6 Insert valve insert into housing without control top

Install connection 0 – with angled push-in fitting (W)

Prerequisites

- Valve insert is mounted with actuator
- Connection "0" is present

⚠WARNING

Spring tension in the valve (NC)

Danger of injury when opening the clamp connections on the actuator or on the housing as the released spring pretension will suddenly lift the actuator.

- Therefore, release the spring tension before detaching the clamp connections by supplying the actuator with compressed air at max. 8 bar.

ATTENTION

The shaft of the valve disc and double disk are sealing surfaces and must not be damaged.

Damage to these parts can cause malfunction.

- Carefully remove valve disk and double disc from housing.

1. Carefully guide valve insert through the upper housing (402) until sealing washer (V5) with seal ring (V1) is seated in upper housing (402).
2. Fit actuator cover (138) with air connection (117) on top of actuator (A).
3. Install clamp ring (B12) between actuator cover (138) and actuator (A) and tighten to specified torque.
4. Pressurise actuator (A) at (Y) with compressed air (max. 8 bar).
   → Valve disc (V15) is raised, valve insert seats into housing (402).
5. Install lantern (L) on upper valve housing with clamp connection (43).
   → Ensure that clamp connection (43) is tightened to the required torque.
6. Depressurise actuator (A) at (Y).
   → Valve disc (V15) is lowered.

⇒ Valve is fully assembled.

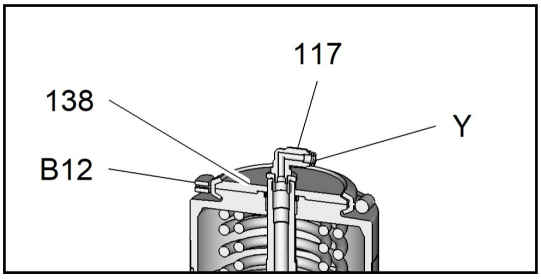

Figure 9-11 - Valve with connection 0 [with angled push-in fitting (W)]

Copyright @ GEA Tuchenhagen GmbH
2025 - All rights reserved

Install connection INA – initiator mounting on actuator

Prerequisites

- Valve insert is mounted with actuator
- Connection "INA" is present

⚠WARNING

Spring tension in the valve (NC)

Danger of injury when opening the clamp connections on the actuator or on the housing as the released spring pretension will suddenly lift the actuator.

- Therefore, release the spring tension before detaching the clamp connections by supplying the actuator with compressed air at max. 8 bar.

ATTENTION

The shaft of the valve disc and double disk are sealing surfaces and must not be damaged.

Damage to these parts can cause malfunction.

- Carefully remove valve disk and double disc from housing.

1. Carefully guide valve insert through the upper housing (402) until sealing washer (V5) with seal ring (V1) is seated in upper housing (402).
2. Fit initiator mounting INA (243) with air connection (246) onto actuator (A).
3. Install clamp ring (B12) between initiator mounting INA (243) and actuator (A) and tighten to specified torque.
4. Pressurise actuator (A) at (Y) with compressed air (max. 8 bar).
   → Valve disc (V15) is raised, valve insert seats into housing (402).
5. Install lantern (L) on upper valve housing with clamp connection (43).
   → Ensure that clamp connection (43) is tightened to the required torque.
6. Depressurise actuator (A) at (Y).
   → Valve disc (V15) is lowered.

⇒ The valve insert has been disconnected from the housing.

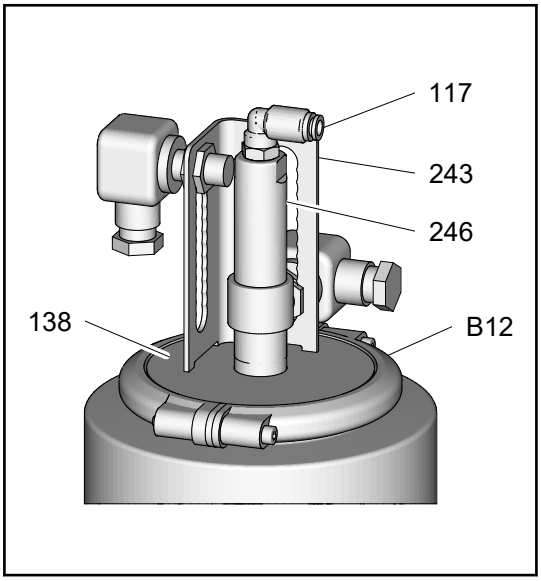

Figure 9-12 - Valve insert with INA connection [initiator mounting on actuator]

PUBLIC
Copyright @ GEA Tuchenhagen GmbH
2025 - All rights reserved

9.7.7 Reconnect the cleaning hose

Cleaning hose preparation

INFO The cleaning hose is made of plastics. When screwing the cleaning hose on, it can become easily constricted in the area of the sealing disc and the cleaning hose can become detached. Therefore, during assembly of the cleaning hose, insert sleeves must be used.

Prerequisites

- Valve is correctly assembled.

1. Cut off the cleaning with the hose cutter at a right angle.
2. Place insertion sleeves up to the edge of the hose.
3. Grease threads and taper of the fitting, cutting ring, and thread of the union nut.

⇒ Cleaning hose is prepared.

INFO GEA Tuchenhagen recommends Rivolta F.L.G. MD-2 and PARALIQ GTE 703 – These lubricants are food-grade, beer foam resistant, and NSF-H1 (USDA H1) registered. Rivolta F.L.G. MD-2 can be ordered from GEA Tuchenhagen.

Fitting the cleaning hose

Prerequisites

- Cleaning hose is prepared.

1. Slide union nut (2), cutting ring (1) and support sleeve (3) over the cleaning hose.

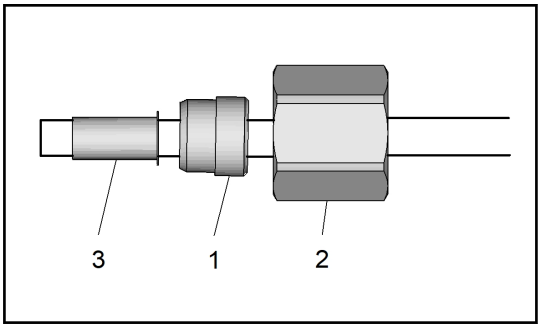

Figure 9-13 - Cleaning hose

⇒ Cleaning hose is assembled.

Assembling the cleaning hose

Prerequisites

- Cleaning hose is prepared and assembled.

1. Screw on the union nut hand tight. When the cleaning hose stops, press it against the inner cone.
2. Turn the union nut about another 1 1/2 turns. Do not turn the cleaning hose with the union nut. The stop-edge limits the motion, requiring a greater turning strength.
   → A marked line on the cleaning hose should aid in making sure that the cleaning hose does not turn.

⇒ Cleaning hose is installed.

Copyright @ GEA Tuchenhagen GmbH
2025 - All rights reserved

Inspection of the cleaning hose

Prerequisites
- Cleaning hose is installed.

1. Loosen the union nut.
2. Check whether the visible collar (3) fills the space in front of the first cutting edge.

→ It will not hurt if the disc on the end of the cleaning hose turns.

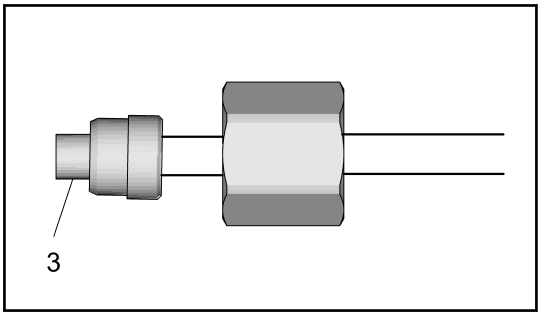

Figure 9-14 - Cleaning hose

⇒ Cleaning hose is inspected.

Re-assembly

Prerequisites
- Cleaning hose is installed.

1. After removing the union nut replace it without using aggressive force. Make sure that the nozzle is also tight.

⇒ Cleaning hose is installed.

9.7.8 Checking the function

9.7.8.1 Check valve stroke and adjust feedback

1. Check valve stroke (C). To do this, measure how far the shaft of the valve disc (V15) protrudes from the lower housing.
2. Then activate the main stroke of the pilot valve (Y1) via the manual control (S).
3. Check valve stroke (C) again and compare the difference - see also *Table 22 Valve strokes*.
4. If the stroke is correct, the adjustment and feedback verification can be carried out.

⇒ The valve stroke has been tested.

INFO Please take the operating instructions for the respective control top into account for adjustment of the feedbacks.

The valve strokes depending on size

Valve size		Valve stroke [mm]
Metric	DN 65	30
	DN 80	30
	DN 100	30
	DN 125	60

PUBLIC
Copyright @ GEA Tuchenhagen GmbH
2025 - All rights reserved

Valve size		Valve stroke [mm]
	DN 150	60
Inch OD	2.5"	30
	3"	30
	4"	30
	6"	60
Inch IPS	2"	30
	3"	30
	4"	30
	6"	60

Table 22: Valve strokes

Copyright @ GEA Tuchenhagen GmbH
2025 - All rights reserved

10 Malfunctions

This chapter contains information about how to rectify problems with the valve.

The target group of this chapter is all persons who carry out actions related to the valve.

Fault	Possible cause	Measure
Valve does not work	Fault in the controller	Check the system configuration
	No compressed air or compressed air too low	Check the compressed air supply Check air hoses for free passage and air tightness
	Fault in the electrical system	Check actuation / external controller and routing of electrical wires
	Solenoid valve defective	Replace the solenoid valve
	Faulty installation position of the valve housing	Install the valve housing aligned correctly upwards
Valve does not close	Dirt/foreign material between valve seat and valve disk	Clean valve housing and valve seat
Valve closes too slowly	O-rings in the actuator and control top are dry (friction losses)	Grease O-rings
Leakage in the area of the valve housing	Housing O-rings defective	Removing the valve Change housing O-rings
Leakage on the valve shaft	Seal ring defective	Replace the seal ring
Leakage in the leakage cavity	V-rings defective	Replace the V-rings

Table 23: Malfunctions

PUBLIC
Copyright @ GEA Tuchenhagen GmbH
2025 - All rights reserved

11 Decommissioning and disposal

This chapter contains information about decommissioning the valve. It also describes the removal and disposal processes. The target group of this chapter is all persons who carry out actions related to the valve.

11.1 Decommissioning

The following principles apply for decommissioning:
- Switch off the compressed air.
- Switch off the component with the main switch.
- Padlock the main switch (if fitted) in the off position to prevent it from being switched back on. The key to the padlock must be deposited with the person responsible until the machine is restarted.
- For longer periods of standstill, observe the storage conditions, see *4.2 Storage*.

11.2 Disposal

11.2.1 General information

Dispose of the valve in an environmentally friendly manner. Observe the statutory waste disposal regulations applicable at the place of installation.

The valve is made of the following materials:
- Metals
- Synthetic materials
- Electronic parts
- Lubricants containing oil and grease

Separate the different materials and dispose of them correctly sorted. Also observe the instructions regarding disposal in the instruction manual for the individual components.

11.2.2 Valve actuator disposal

⚠DANGER

The spring forces in the actuator can be as high as 24 kN.
The pre-stressed spring can cause serious personal injury or death.

- Never open the actuator.
- GEA Tuchenhagen accepts unopened actuators and arranges the proper disposal free of charge.

Prerequisites
- The valve should be disposed of

1. Remove the actuator.
2. Pack the actuator securely and send it to GEA Tuchenhagen GmbH.

⇒ The valve actuator has been disposed of.

Copyright @ GEA Tuchenhagen GmbH
2025 - All rights reserved

12 Replacement parts

This chapter contains information on ordering replacement parts for the valve and is aimed at all users of the valve.

12.1 Order information

Only original spare parts from GEA may be used. All spare parts are packed in GEA original packaging and marked accordingly.

The spare parts are not included in the scope of supply of the machine.

The specifications listed below must be cited on every spare part order.

- Machine type: see type plate
- Machine number: see type plate
- Order number: see spare parts list
- Name: see spare parts list

12.2 Spare parts list

https://assets.gea.com/gea/action/browseItems?categoryId=153684&categoryTypeId=2&cachedCriteria=1

Link to spare parts list - valve type B

Link to spare parts list - valve type B_L

Link to spare parts list - valve type B_C

www.GEA.com

Overview of technologies and products

PUBLIC

Copyright @ GEA Tuchenhagen GmbH
2025 - All rights reserved

13 Annex

13.1 Dimension sheet

www.assets.gea.com

Link to the dimension sheet: GEA VARIVENT® Valve Type B

13.2 List of abbreviations

Abkürzung	Erläuterung
BS	Britischer Standard
bar	Maßeinheit für den Druck [Bar] Alle Druckangaben [bar/psi] stehen für Überdruck [barg/psig] soweit dies nicht explizit anders beschrieben ist.
ca.	circa
°C	Maßeinheit für die Temperatur [Grad Celsius]
CIP	Clean in Place
dm^3n	Maßeinheit für das Volumen [Kubikdezimeter] Normvolumen (Normliter)
DN	DIN-Nennweite
DIN	Deutsche Norm des DIN (Deutsches Institut für Normung e.V)
EN	Europäische Norm
EPDM	Materialangabe, Kurzbezeichnung nach DIN/ ISO 1629: Ethylen-Propylen-Dien-Kautschuk
°F	Maßeinheit für die Temperatur [Grad Fahrenheit]
FKM	Materialangabe, Kurzbezeichnung nach DIN/ ISO 1629: Fluor-Kautschuk
h	Maßeinheit für die Zeit [Stunde]
HNBR	Materialangabe,
	Kurzbezeichnung nach DIN/ ISO 1629: Hydrierter Acrylnitril-Butadien-Kautschuk
IP	Schutzart
ISO	Internationaler Standard der International Organization for Standardization
kg	Maßeinheit für das Gewicht [Kilogramm]
kN	Maßeinheit für die Kraft [Kilonewton]
Kv-Wert	Durchflusskoeffizient [m^3/s] 1 KV = 0,86 x Cv
l	Maßeinheit für das Volumen [Liter]

Copyright @ GEA Tuchenhagen GmbH
2025 - All rights reserved

Abkürzung	Erläuterung
max.	maximal
mm	Maßeinheit für die Länge [Millimeter]
µm	Maßeinheit für die Länge [Mikrometer]
M	metrisch
NC	Normally Closed; Antrieb ist federschließend, Ventil ist in Ruhelage geschlossen
Nm	Maßeinheit für das Anzugsmoment [Newtonmeter] 1 Nm = 0,737 lbft Pound-Force/Pfund-Kraft (lb) + Feet/Fuß (ft)
NO	Normally Open; Antrieb ist federöffnend, Ventil ist in Ruhelage geöffnet
PA	Polyamid
PE-LD	Polyethylen niedriger Dichte
PPE	Polyphenylenether
psi	anglo-amerikanische Maßeinheit für den Druck [Pound-force per square inch] Alle Druckangaben [bar/psi] stehen für Überdruck [barg/psig] soweit dies nicht explizit anders beschrieben ist.
PTFE	Polytetrafluorethylen
SET-UP	selbstlernende Installation Die SET-UP Prozedur führt bei Inbetriebnahme und Wartung alle erforderlichen Einstellungen für die Generierung von Meldungen durch.
SW	Angabe für die Größe der Werkzeugschlüssel Schlüsselweite
T.VIS	Tuchenhagen Ventil Informations-System
V AC	Volt alternating current = Wechselstrom
V DC	Volt direct current = Gleichstrom
W	Maßeinheit für die Leistung [Watt]
WIG	Schweißverfahren Wolfram-Inertgas-Schweißen
Zoll	Maßeinheit für die Länge im englische Sprachraum
Zoll OD	Rohrabmessung nach Britischem Standard (BS), Outside Diameter
Zoll IPS	amerikanische Rohrabmessung Iron Pipe Size

13.3 List of diagrams

Figure 2-1 - Structure of a preceding warning notice....13
Figure 2-2 - Structure of an integrated warning notice....13
Figure 2-3 - Danger zone at the valve....16
Figure 3-1 - Design of the valve B_L with cleaning connection (left), valve B_C without cleaning connection (right) 21
Figure 3-2 - Valve closed in idle position (NC)....22

Copyright @ GEA Tuchenhagen GmbH
2025 - All rights reserved

Figure 3-3 - Signs - layout 23
Figure 4-1 - Valve transport 32
Figure 5-1 - Hose connection diagram 37
Figure 9-1 - Seals in contact with the product 42
Figure 9-2 - Removing the control top 47
Figure 9-3 - Valve with connection 0 [angled push-in fitting (W)] 49
Figure 9-4 - Valve with connection INA [initiator mounting on actuator] 50
Figure 9-5 - Housing combination 54
Figure 9-6 - Other Seals 58
Figure 9-7 - Housing combination with seat ring with marked installation direction 61
Figure 9-8 - Valve insert 63
Figure 9-9 - Valve insert in the housing 66
Figure 9-10 - Fitting the control top 67
Figure 9-11 - Valve with connection 0 [with angled push-in fitting (W)] 69
Figure 9-12 - Valve insert with INA connection [initiator mounting on actuator] 70
Figure 9-13 - Cleaning hose 71
Figure 9-14 - Cleaning hose 72

13.4 List of tables

Table 1 - General hazard 15
Table 2 - Mechanical hazards - moving or rotating components 15
Table 3 - Electrical hazard – electromagnetic 15
Table 4 - Thermal hazards 16
Table 5 - Residual dangers and measures 17
Table 6 - Design of the valve 21
Table 7 - Signs - overview 24
Table 8 - Technical data - valve 25
Table 9 - Technical data - ambient temperatures 25
Table 10 - Technical data - compressed air supply 25
Table 11 - Technical data - weights 26
Table 12 - Cleaning connection - sizes 27
Table 13 - Cleaning connection - resistance 27
Table 14 - Resistance and permitted operating temperature of the sealing materials 28
Table 15 - Temperature resistance of the sealing materials 29
Table 16 - Dimensions pipe DN 29
Table 17 - Dimensions pipe OD 29
Table 18 - Dimensions pipe IPS 30
Table 19 - Lubricants 30
Table 20 - Air requirement - actuator 35
Table 21 - List of tools 44
Table 22 - Valve strokes 72
Table 23 - Malfunctions 74

Copyright @ GEA Tuchenhagen GmbH
2025 - All rights reserved

GEA Tuchenhagen GmbH
Am Industriepark 2-10
21514 Büchen , Germany

Phone +49 4155 49-0

430BAL008326 Copyright © GEA Tuchenhagen - All rights reserved - Subject to modifications.